2023 Edition 1

PUCK™

Built to Lead.

PUMP

PARTS BOOK

www.Puck.com

ABOUT US

Puck Family of Brands

Puck designs and manufactures industry-leading manure and liquid transfer equipment.
We are innovators who work hard to make our liquid transfer equipment better for one simple reason; we don't just build the equipment, we use it.

LightSpeed technology comes standard on all Puck pumps, so all your pumps will be protected and monitored by the watchful eyes of this powerful platform. Regulate pressures and add another layer of safety without adding more people to your operation, through LightSpeed's advanced protection technology.

Designed for high performance and durability, BullDog Hose Company's American-made agricultural hoses deliver a steady and reliable flow. From crop irrigation to liquid manure application operations, BullDog hoses are developed to withstand harsh conditions with performance you can depend on.

U.S. Coupling & Accessories, Inc. strives to develop engineering-based solutions for customer needs, such as accessories for umbilical manure slurry applications. We lead the industry in products for large diameter supply hose and drag hose fittings.

TABLE OF CONTENTS

8NNWH Pump	4
10NNWH Pump	13
4NHTB Pump	22
6NHTB Pump	33
6819MPC Pump	44
81022MP Pump	56

8NNWH PUMP

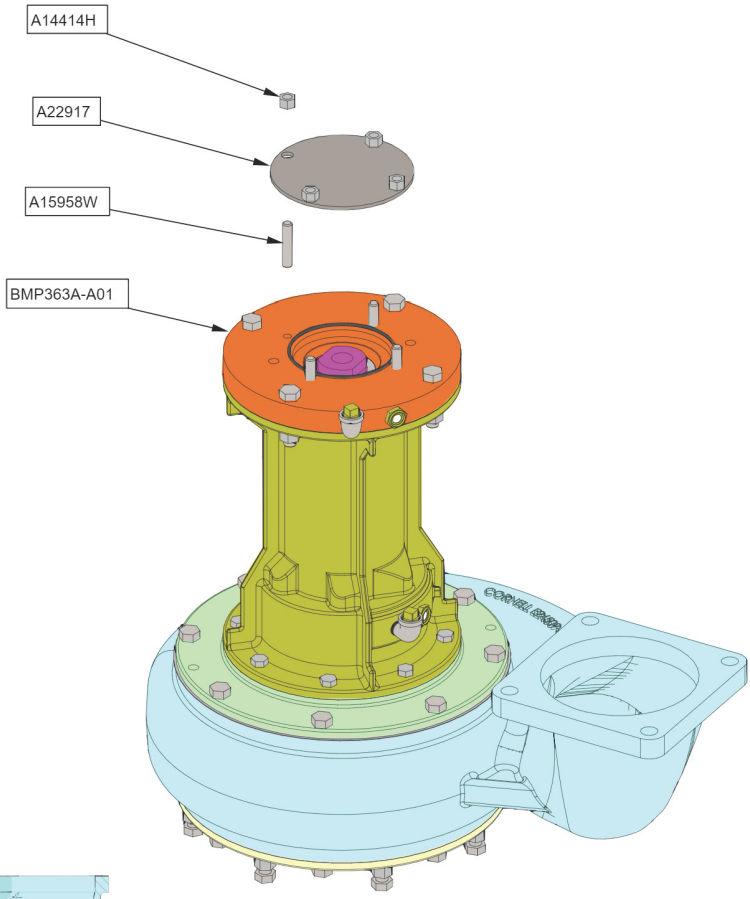

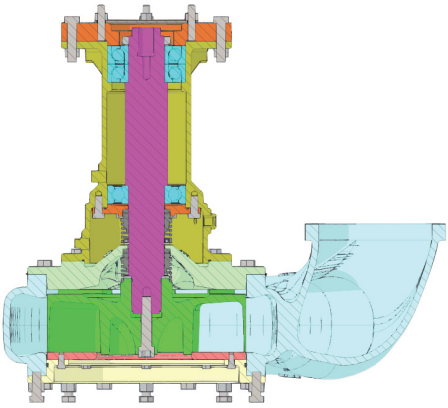

PART NUMBER	DESCRIPTION	QTY
BMP36A-A01	**8NNWH-HS16DBK CYC CAC THB**	**1EA**
A22917-183-SK	**COVER PLATE, HS18DB FRAME**	**1EA**
A15958W-433-SD	**STUD, .50-13NC X 2.50 ALL THREAD**	**4EA**
A14414H-362-SD	**NUT, .50 NC HEAVY HEX 18-8**	**4EA**

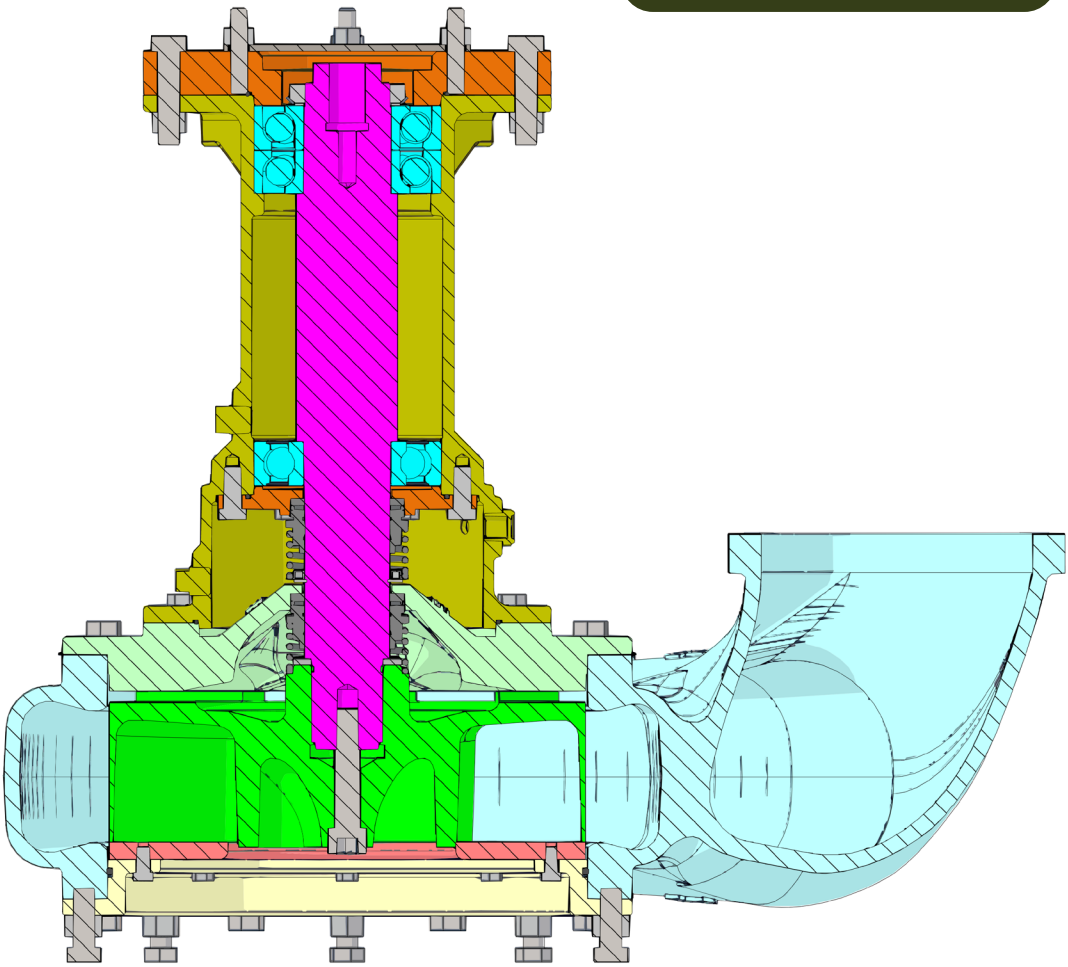

8NNWH PUMP

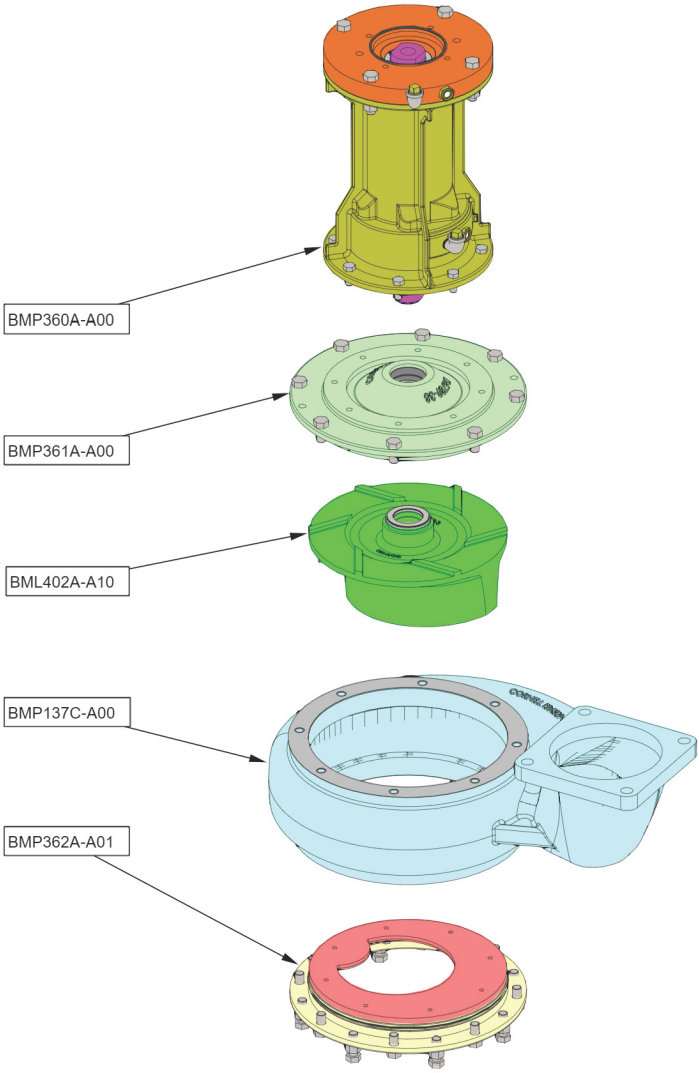

PART NUMBER	DESCRIPTION	QTY
BMP362A-A01	**SUCTION COVER, 8NNDH CUTTER**	**1EA**
BMP137C-A00	**VOLUTE 8NNDH AXIAL DISCHARGE**	**1EA**
BML402A-A10	**IMPELLER, 8NNWH THRD'D CUTTER**	**1EA**
BMP361A-A00	**BACKPLATE, 8NNDH HS16 LIGHT**	**1EA**
BMP360A-A00	**FRAME HS16DB B24966 LIGHT**	**1EA**

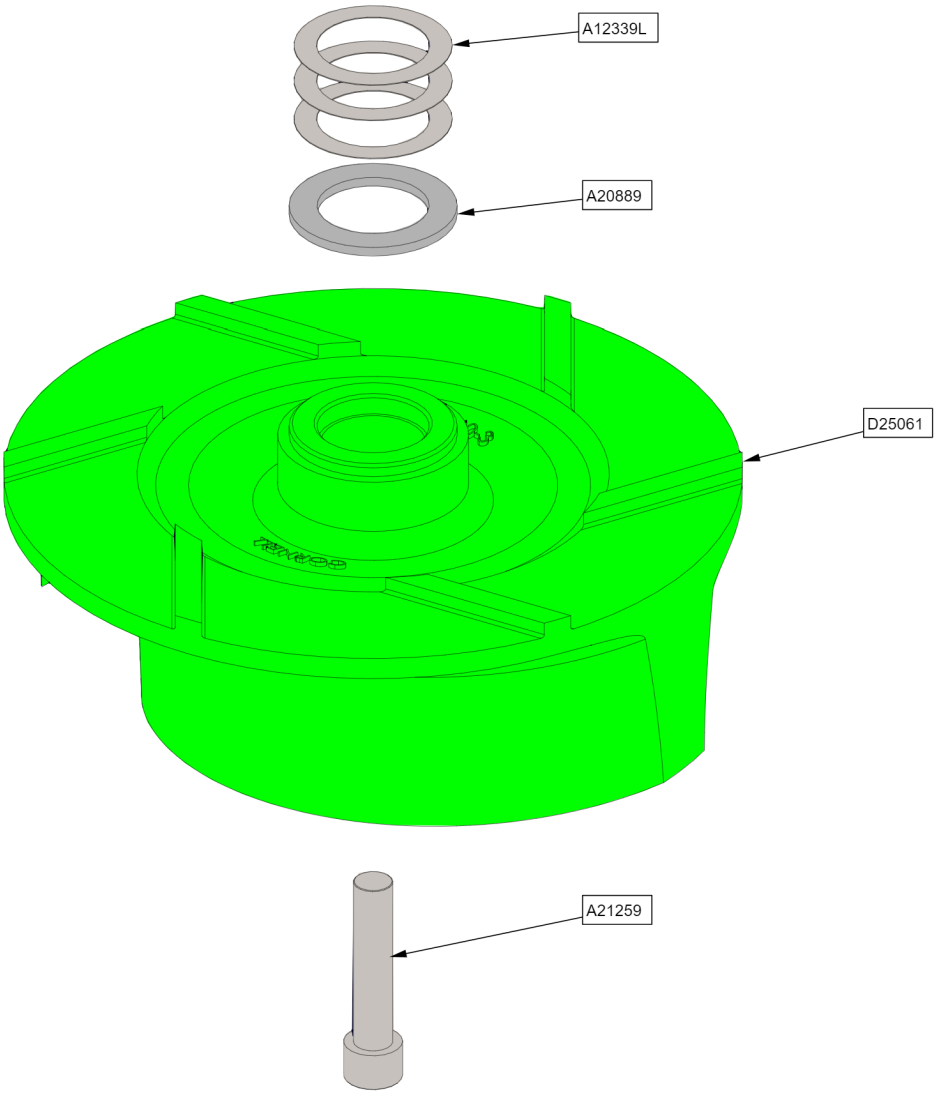

PART NUMBER	PUCK PART NUMBER	DESCRIPTION	QTY
D25061-3-CAC-R	**15-00409-11**	**IMPELLER, 8NNWH CUTTER**	**1EA**
A21259-12-SD	**15-00408-11**	**LOCKSCREW .75NC X 3.50 SOC 18-8**	**1EA**
A20889-95-ST	**15-00432-11**	**THRUST WASHER, 4414T, THREADED**	**1EA**
A12339L-107-SDA	**15-00517-11**	**IMPELLER SHIM .015" THICK (AS REQ-D)**	**4EA**

8NNWH PUMP

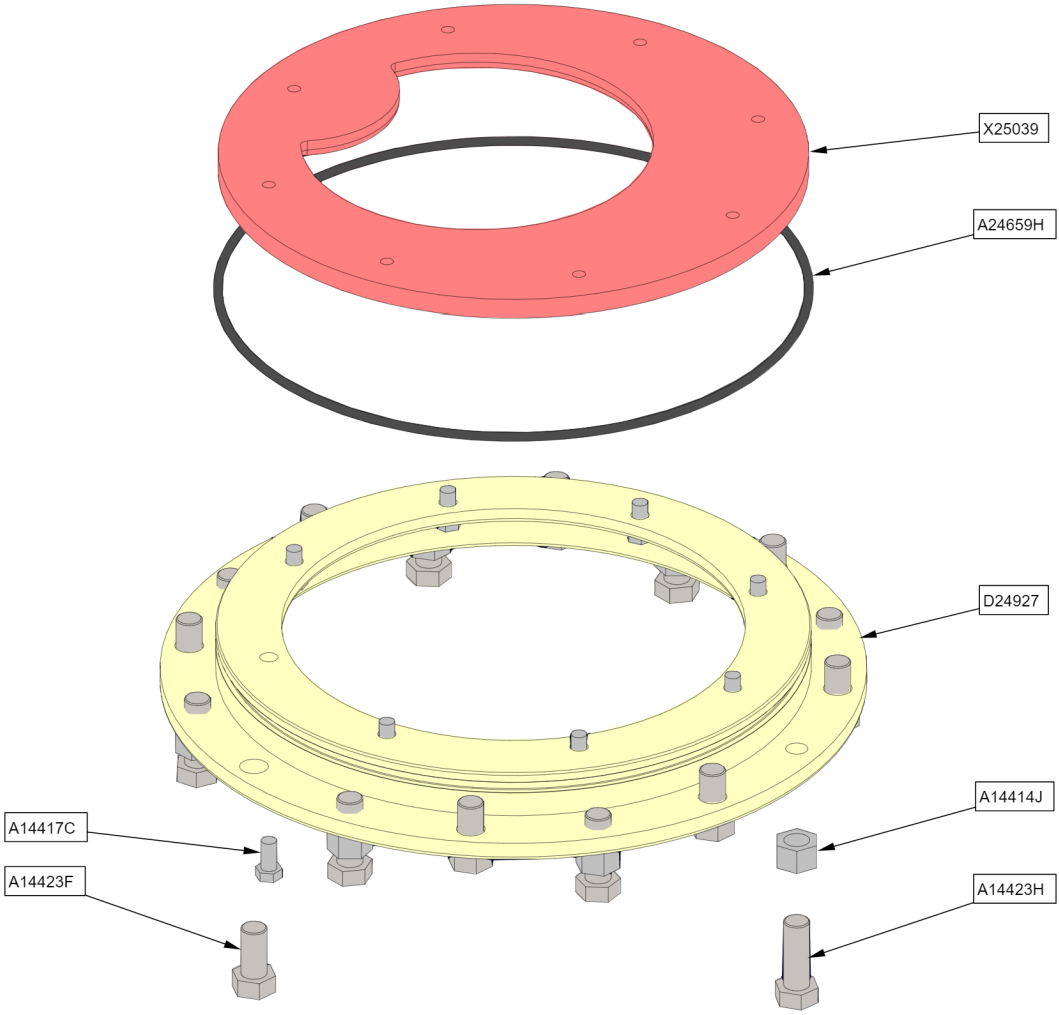

PART NUMBER	PUCK PART NUMBER	DESCRIPTION	QTY
D24927-1-CI	**15-00407-11**	**SUCTION COVER, 8NNWH CUTTER MOD**	**1EA**
X25039-392-YD	**15-00316-11**	**CUTTER PLATE, 8NNWH 1- TOOTH ECCENTRIC**	**1EA**
A14417C-128-SE		**CPSCR, HEX .38NC X .75 316SS**	**8EA**
A14423F-128-SE		**CPSCR, HEX .62NC X 1.25 316SS**	**8EA**
A24659H-59-EB	**15-00405-11**	**O-RING 13.00 X 13.38 X .19 THK (2-382)**	**1EA**
A14423H-128-SM		**CPSCR, HEX .62NC X 1.75 GR5**	**8EA**
A14414J-362-SK		**NUT, .62 NC HEAVY HEX STEEL**	**8EA**

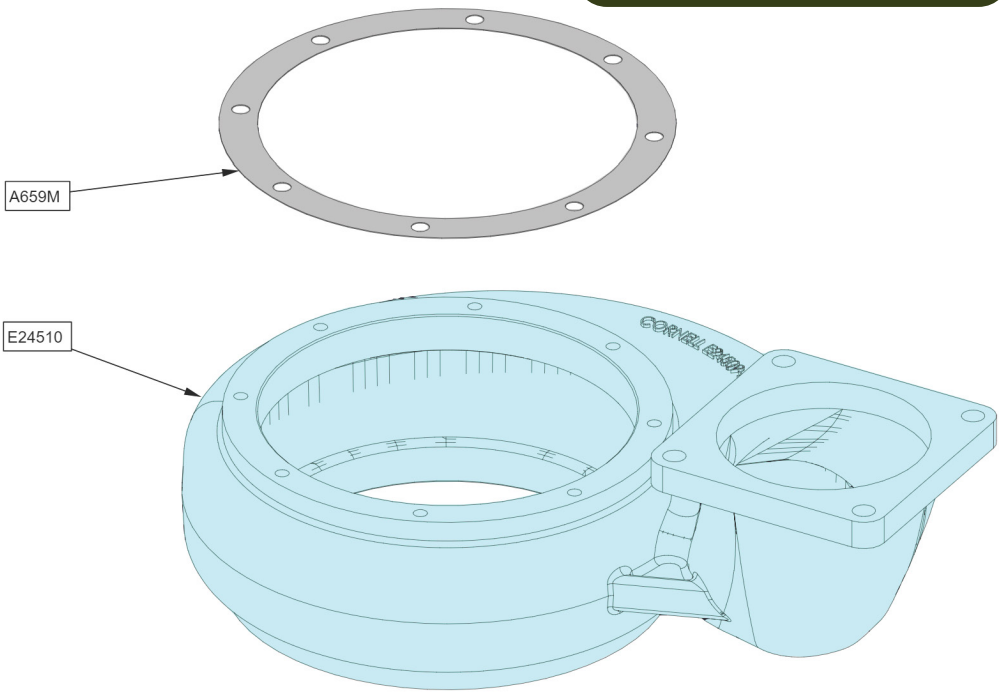

PART NUMBER	PUCK PART NUMBER	DESCRIPTION	QTY
E24510-2-CV	**15-00562-11**	**VOLUTE 8NN, AXIAL DISCHARGE**	**1EA**
A659M-197-GA	**15-00568-11**	**VOLUTE GASKET**	**1EA**

8NNWH PUMP

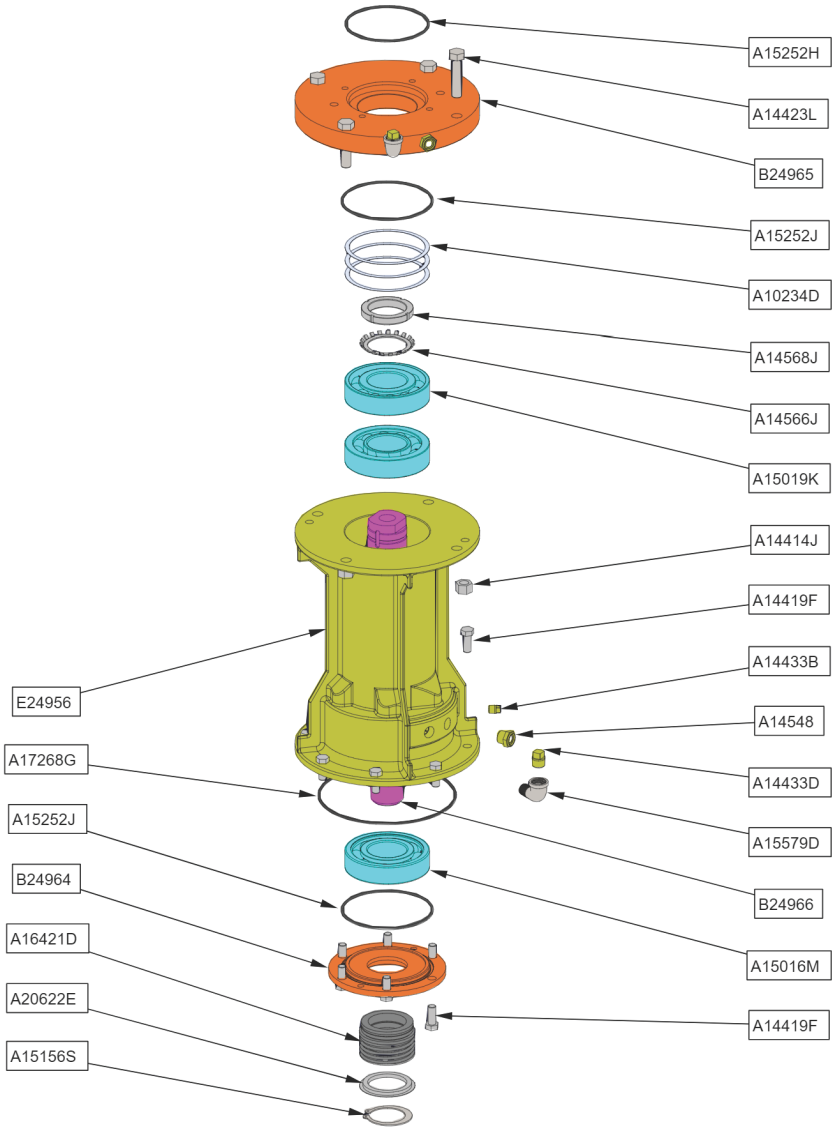

PART NUMBER	PUCK PART NUMBER	DESCRIPTION	QTY
E24956-8-CI	**15-00584-11**	**FRAME, HS16 SUBMERSIBLE LIGHT**	**1EA**
A15579D-365-SE		**EL STR 90 .50NPT STD 316SS**	**2EA**
A14433B-56-SE		**PIPE PLUG .25 NPT (316 SS) (SOLID PLUG)**	**1EA**
A14433D-56-SE		**PIPE PLUG .5 NPT (316 SS) (SOLID PLUG)**	**4EA**
A14548-188-SK		**VIEW GAUGE**	**2EA**
A17268G-59-EB	**15-00547-11**	**O-RING 8.75 X 9.00 X .12 THK. (2-269)**	**1EA**
A14419F-128-SE		**CPSCR, HEX .50NC X 1.25 316SS**	**8EA**
B24966-14-SP	**15-00448-11**	**SHAFT, HS16DB, 8NNDH SAE C SPLINE**	**1EA**

PART NUMBERS CONT.

PART NUMBER	PUCK PART NUMBER	DESCRIPTION	QTY
A15016M-20	15-00412-11	BEARING 16B	1EA
A15019K-20	15-00413-11	BEARING 7313BECBM	2EA
A14566J-363-SK	15-00527-11	LOCK WASHER W-13	1EA
A14568J-129-SK	15-00528-11	LOCK NUT N-13	1EA
A10234D-107-AS	15-00253-11	SHIM .005" THICK (AS REQ'D)	3EA
B24964-22-CI		BEARING COVER, HS16DB PE 2502 SS	1EA
A15252J-59-EB	15-00434-11	O-RING 5.75 X 6.00 X .12 THK	2EA
B24965-22-CI	15-00553-11	BEARING COVER, HS16DB DE SAE C FLG	1EA
A15252H-59-EB	15-00320-11	O-RING 5.25 X 5.50 X .12 THK	1EA
A14419F-128-SE		CPSCR, HEX .50NC X 1.25 316SS	6EA
A14423L-128-SE		CPSCR, HEX .62NC X 2.75 316SS	4EA
A14414J-362-SE		NUT, .62 NC HEAVY HEX 316SS	4EA
A16421D-40	15-00414-11	SEAL 2502S RP	1EA
A20622E-40	15-00437-11	SPRING HOLDER 2502S SS	1EA
A151565S-35-RS	15-00554-11	SNAP RING 5100-250	1EA

8NNWH PUMP

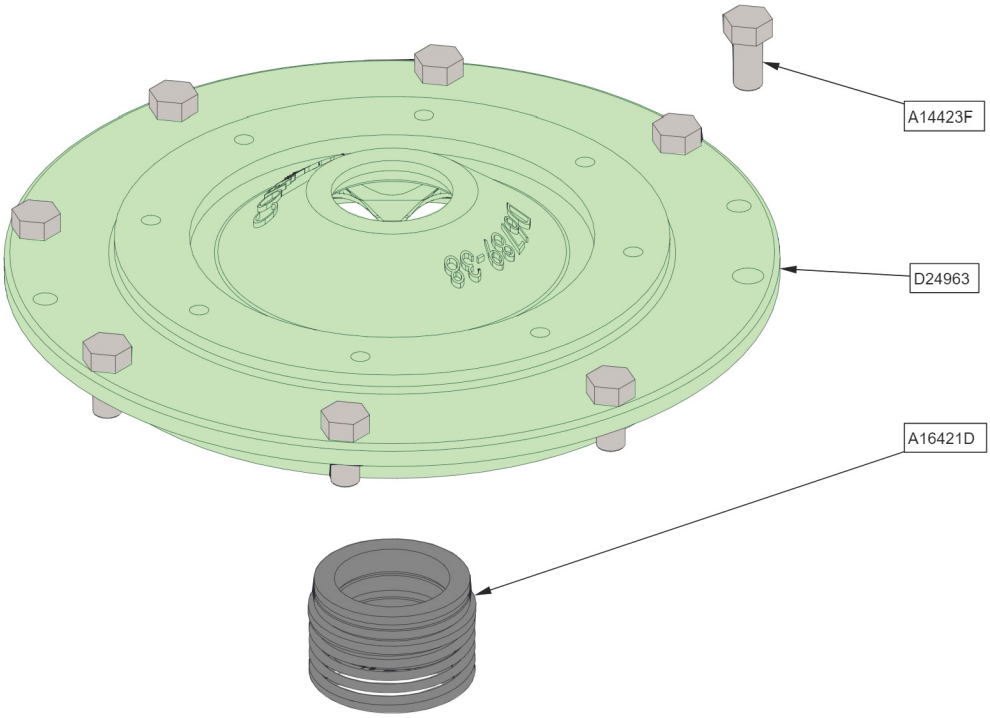

PART NUMBER	PUCK PART NUMBER	DESCRIPTION	QTY
D24963-38-CI	**15-00516-11**	**BACKPLATE 8NNDH, HS16**	**1EA**
A16421D-40	**15-00414-11**	**SEAL 250S2 RP**	**1EA**
A14423F-128-SE		**CPSCR, NEX .62NC X 1.25 316SS**	**8EA**

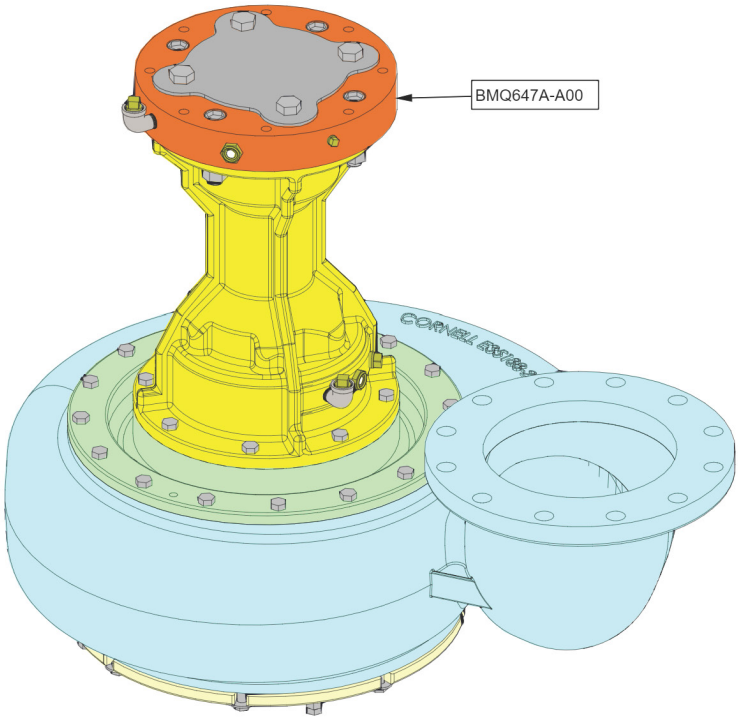

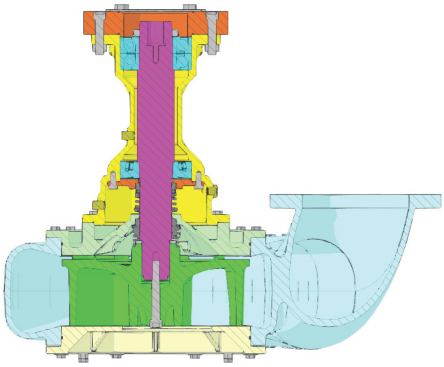

PART NUMBER	DESCRIPTION	QTY
BMQ647A-A00	**10NNWH-HS18DSK CYC CAC THD AXIAL 1**	**1EA**

10NNWH PUMP

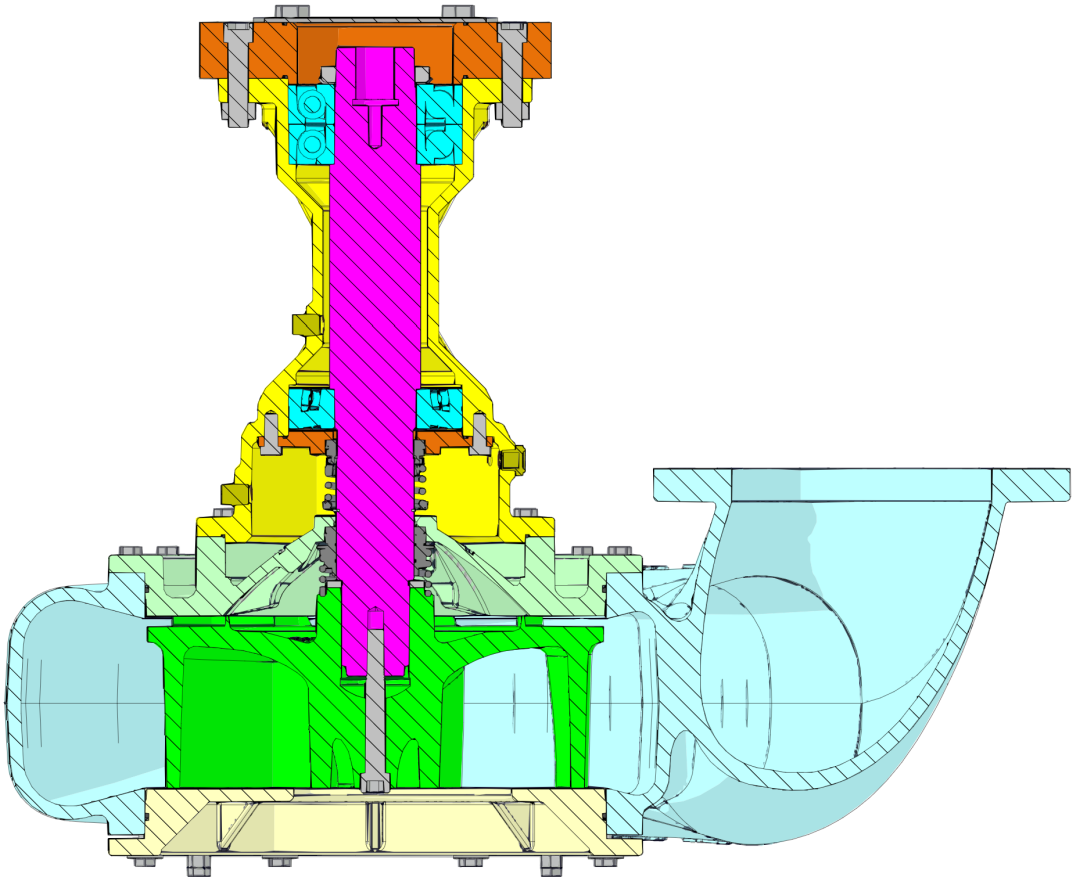

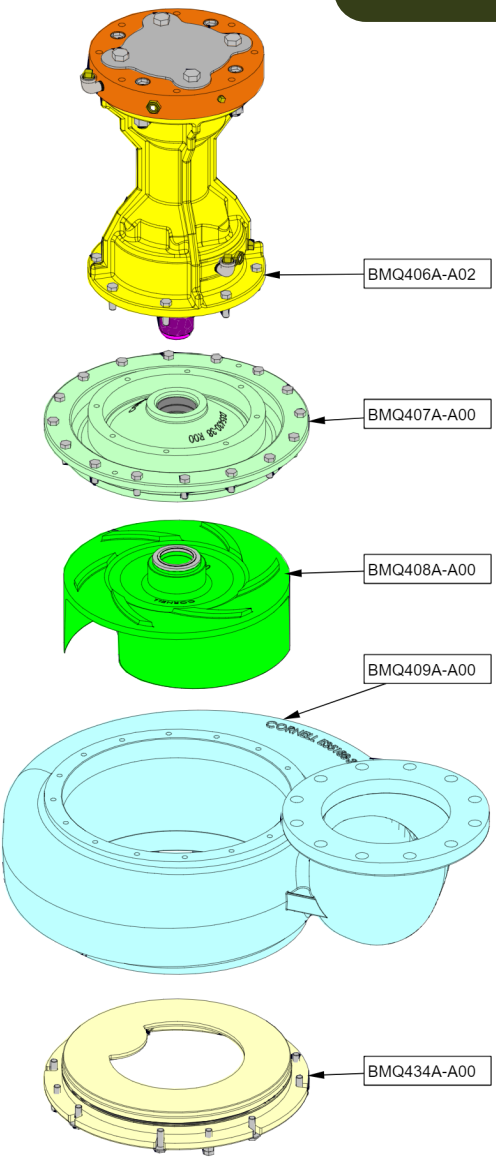

PART NUMBER	DESCRIPTION	QTY
BMQ43A-A00	**SUCTION COVER/CUTTER,10NNWH**	**1EA**
BMQ409A-A00	**VOLUTE, 10NNWH AXIAL DISCHARGE**	**1EA**
BMQ408A-A00	**IMPELLER, 10NNWH CUTTER**	**1EA**
BMQ407A-A00	**BACKPLATE, 10NNWH HS18DSK LIGHT**	**1EA**
BMQ406A-A02	**FRAME, HS18DSK SUBMERSIBLE LIGHT SA**	**1EA**

10NNWH PUMP

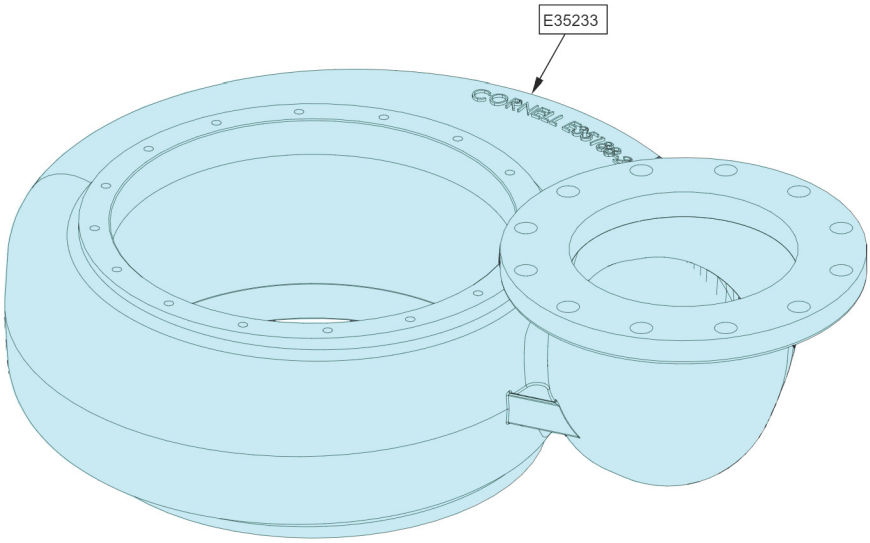

PART NUMBER	DESCRIPTION	QTY
E35233-2-CV	**VOLUTE 10NNWH AXIAL DISCHARGE**	**1EA**

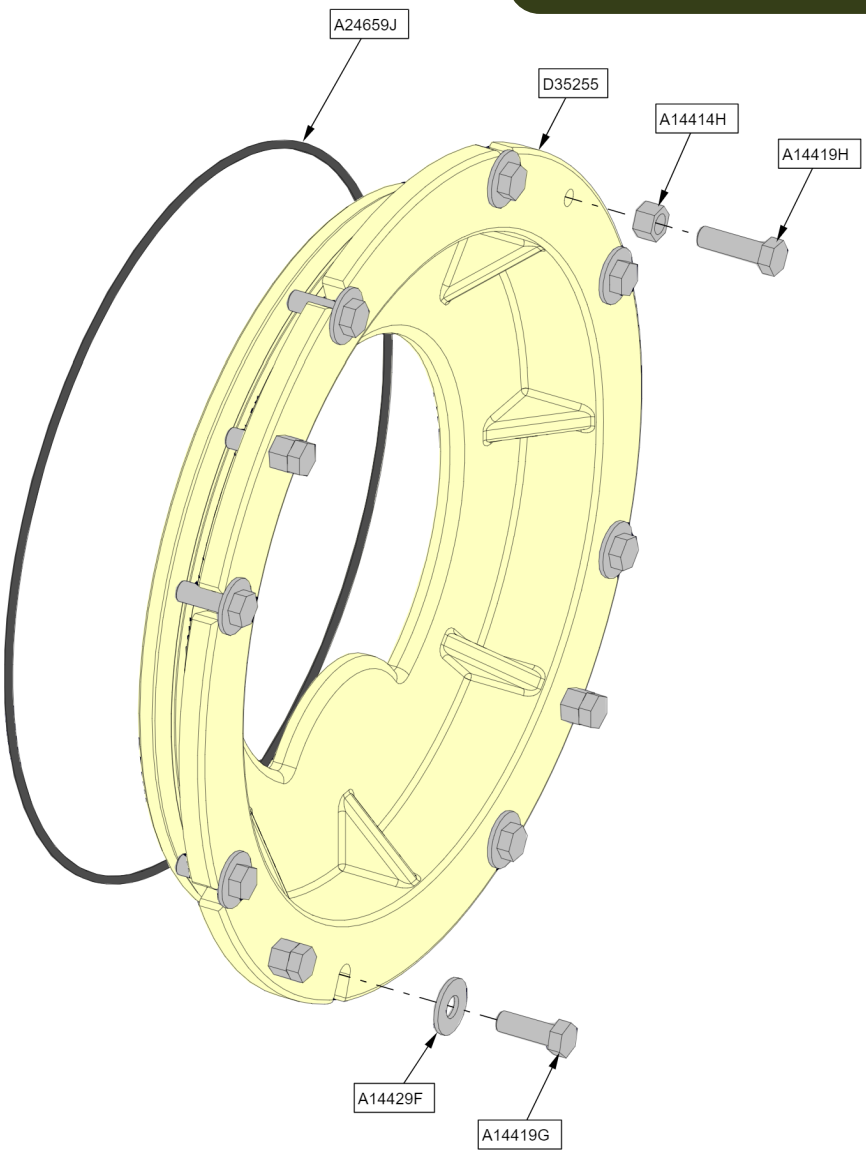

PART NUMBER	PUCK PART NUMBER	DESCRIPTION	QTY
D35255-1-CAC	**15-00586-11**	**SUCTION/CUTTER 10NNWH**	**1EA**
A14419G-128-SE		**CPSCR, HEX .50NC X 1.50 316SS**	**8EA**
A14429F-193-SE		**WASHER, PLAIN .50 316SS**	**8EA**
A24659J-59-EB	**15-00588-11**	**O-RING 17.00 X 17.38 X .19 THK (2-386)**	**1EA**
A14419H-128-SM		**CPSCR, HEX .50NC X 1.75 GRS**	**4EA**
A14414H-362-SK		**NUT, .50 NC HEAVY HEX STEEL**	**4EA**

10NNWH PUMP

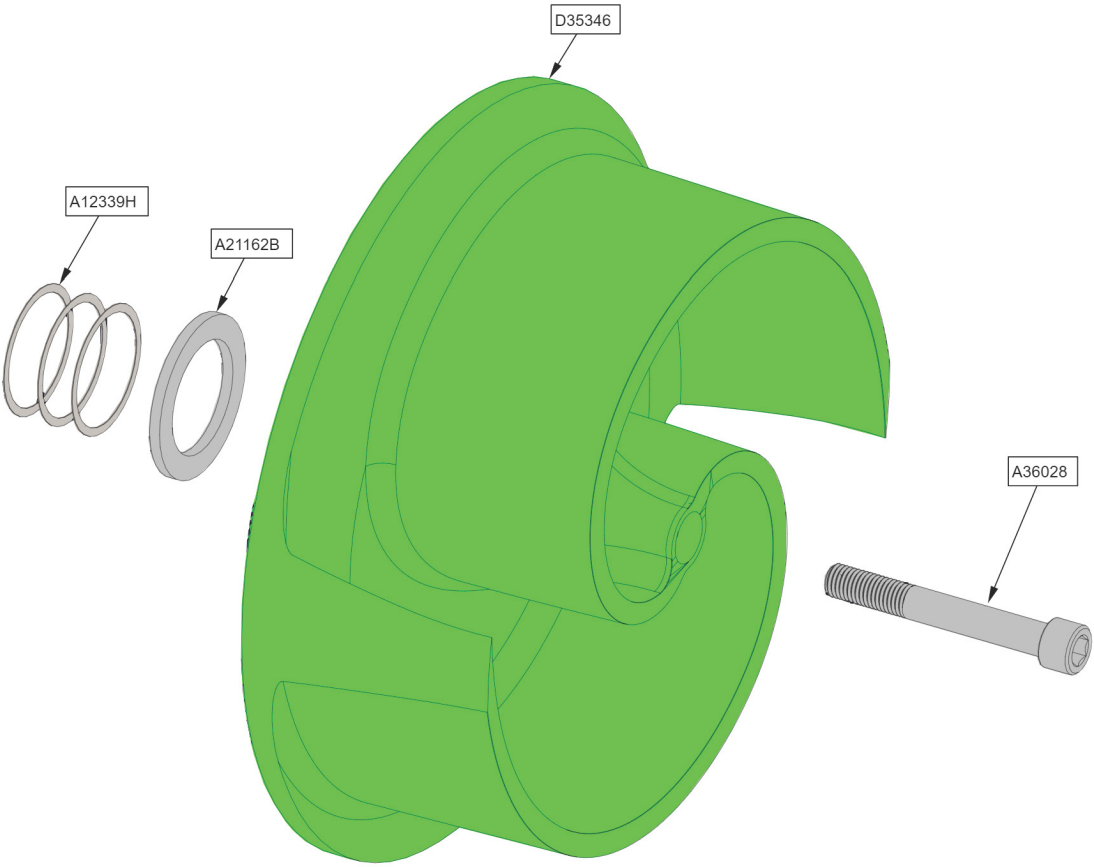

PART NUMBER	PUCK PART NUMBER	DESCRIPTION	QTY
D35346-3-CAC-R	**15-00583-11**	**IMPELLER, 10NNWH CUTTER**	**1EA**
A36028-12-SD	**15-00586-11**	**LOCKSCREW .75NC X 5.50 SOC 18-8**	**1EA**
A21162B-193-ST	**15-0011-11**	**THRUST WASHER 3.75 X 2.64 X .25**	**1EA**
A12339H-107-SDA	**15-00490-11**	**IMPELLER SHIM .015" THICK (AS REQ-D)**	**3EA**

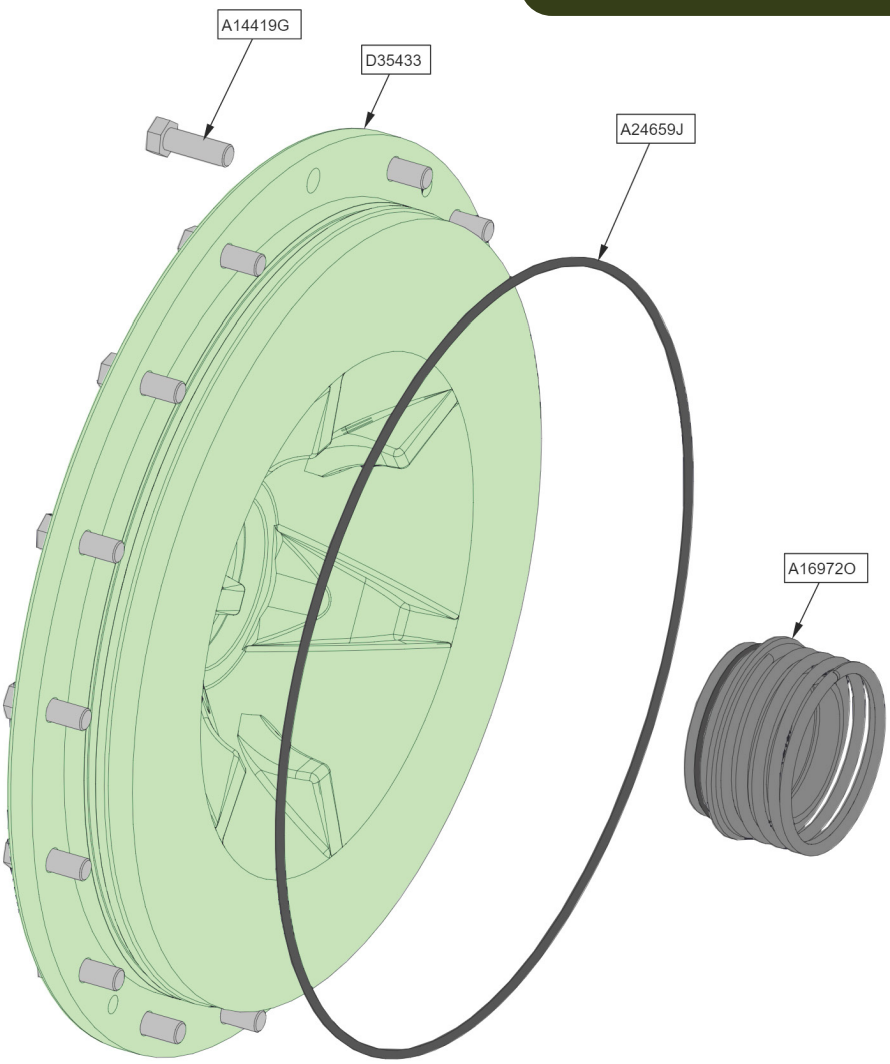

PART NUMBER	PUCK PART NUMBER	DESCRIPTION	QTY
D35433-38-CI	**15-00591-11**	**BACKPLATE 10NNWH HS18 LIGHT**	**1EA**
A24659J-59-EB	**15-00588-11**	**O-RING 17.00 X 17.38 X .19 THK (2-386)**	**1EA**
A14419G-128-SE		**CPSCR, HEX .50NC X 1.50 316SS**	**16EA**
A16972O-40	**15-00066-11**	**SEAL 3002S RP**	**1EA**

10NNWH PUMP

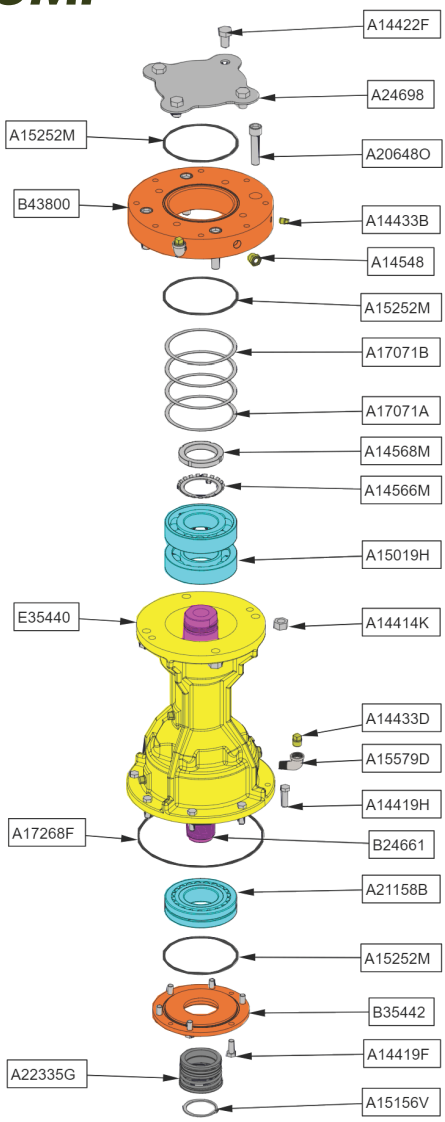

PART NUMBER	PUCK PART NUMBER	DESCRIPTION	QTY
E35440-8-CI		**FRAME HS18 SUBMERSIBLE**	**1EA**
A15579D-365-SE		**EL STR 90 .50NPT STD 316SS**	**2EA**
A14433B-56-SE		**PIPE PLUG .25NPT (316 SS) (SOLID PLUG)**	**1EA**
A14433D-56-SE		**PIPE PLUG .5 NPT (316 SS) (SOLID PLUG)**	**5EA**
A14548-188-SK		**VIEW GAUGE**	**2EA**
A17268F-59-EB	**15-00322-11**	**O-RING 11.48 X 11.76 X .139THK**	**1EA**
A14419H-128-SE		**CPCR, HEX .50NC X 1.75 316SS**	**8EA**
A14419F-128-SE		**CPCR, HEX .50NC X 1.25 316SS**	**6EA**
B24661-14-FH	**15-00546-11**	**SHAFT, HS18DB, SAE D SPLINE, THRD'D**	**1EA**

PART NUMBERS CONT.

PART NUMBER	PUCK PART NUMBER	DESCRIPTION	QTY
A21158-20	15-00592-11	BEARING, SKF 21316 E	1EA
A15019H-20	15-00188-11	BEARING 18DBE	2EA
A14566M-363-SK	15-00127-11	LOCK WASHER W-16	1EA
A14568M-129-SK	15-00144-11	LOCK NUT AN-16	1EA
A17071A-107-AS	15-00251-11	SHIM .010 THICK (AS REQ'D)	3EA
A17071B-107-AS	15-00252-11	SHIM .005 THICK (AS REQ'D)	1EA
B35442-22-CI		BEARING COVER, HS18DB PE LIGHT 3" SE	1EA
A14419F-128-SE		CPSCR, HEX .50NC X 1.25 316SS	6EA
A1525M-59-EB	15-00321-11	O-RING 6.75 X 7.00 X .12 THK	3EA
B43800-22-CP		BEARING COVER- DRIVE END	1EA
A20648O-128-SE		CPSCR, SOC .75NC X 3.25 LG.	4EA
A14414K-362-SE		NUT, .75 NC HEAVY HEX 316SS	4EA
A22335G-40	15-00430-11	SEAL 30021S AI SH	1EA
A1516V-35-RS		SNAP RING 5100-300	1EA
A24698-183-SK		COVER PLATE, HS18DB, SEA D-4 FLANGE	1EA
A14422F-128-SE		CPSCR, HEX .75NC X 1.25 316SS	4EA

4NHTB PUMP

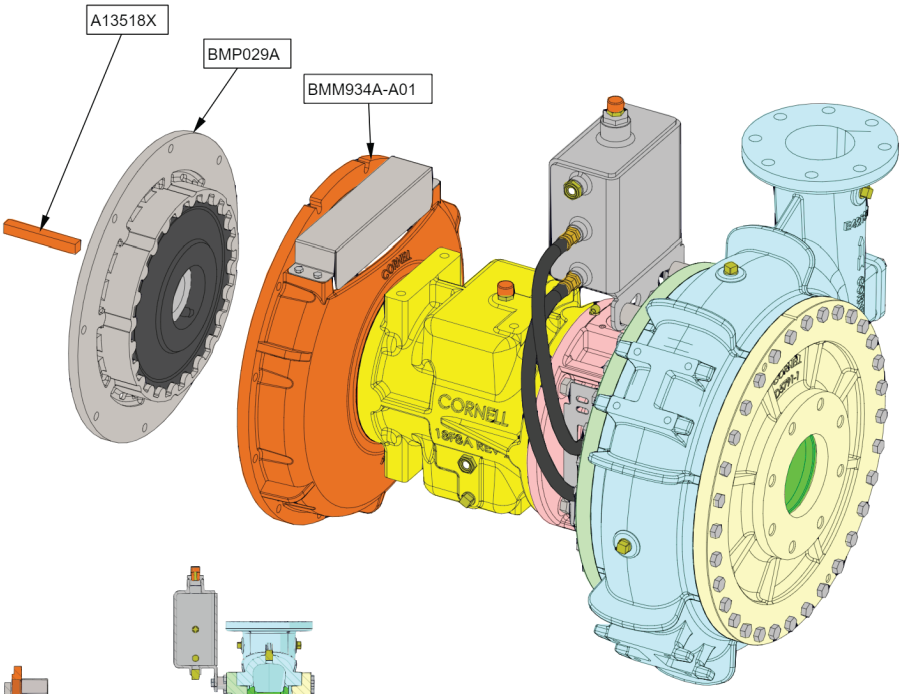

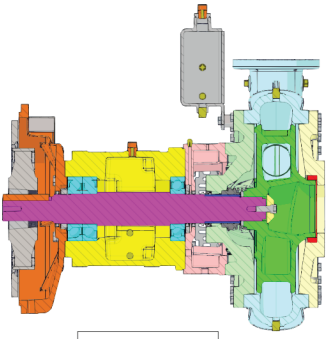

CROSS SECTION

PART NUMBER	DESCRIPTION	QTY
BMM934A-A01	**4NNTB-EM18DBK-1 R-D THRD**	**1EA**
BMP029A	**RDD 14", 2.5" SH, ARCUS AC- T4.SN**	**1EA**
A13518X-28-KS	**KEY .62 X 4.75**	**1EA**

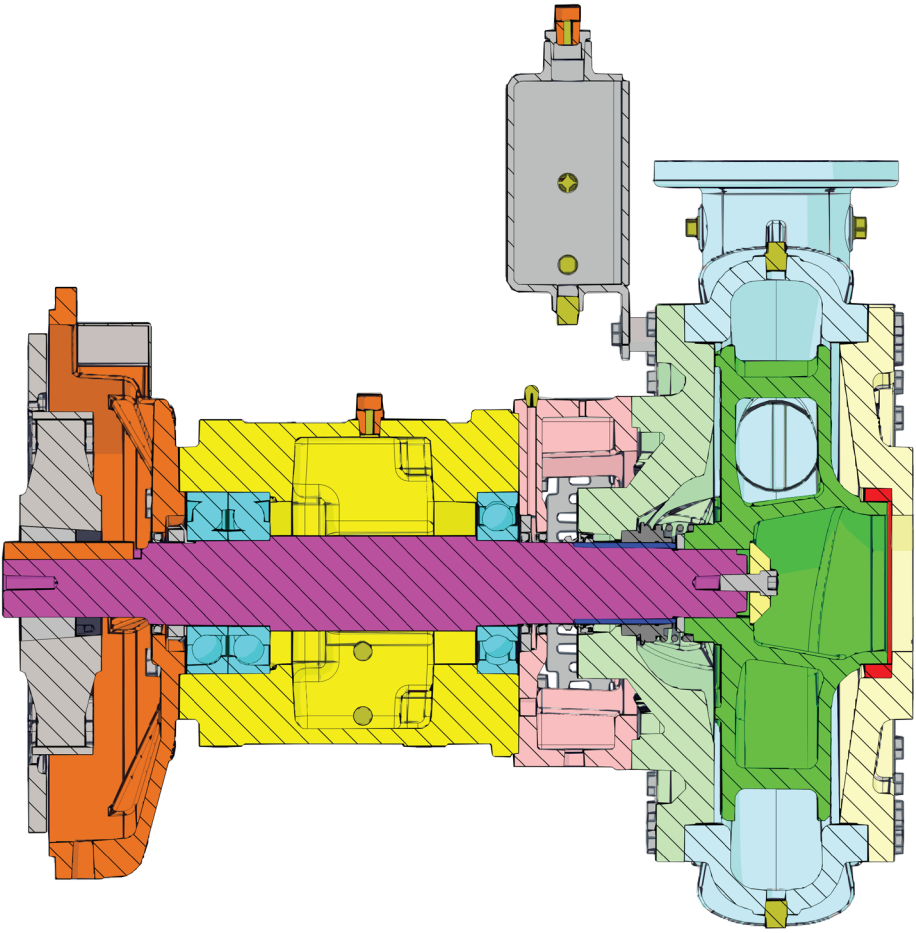

4NHTB PUMP

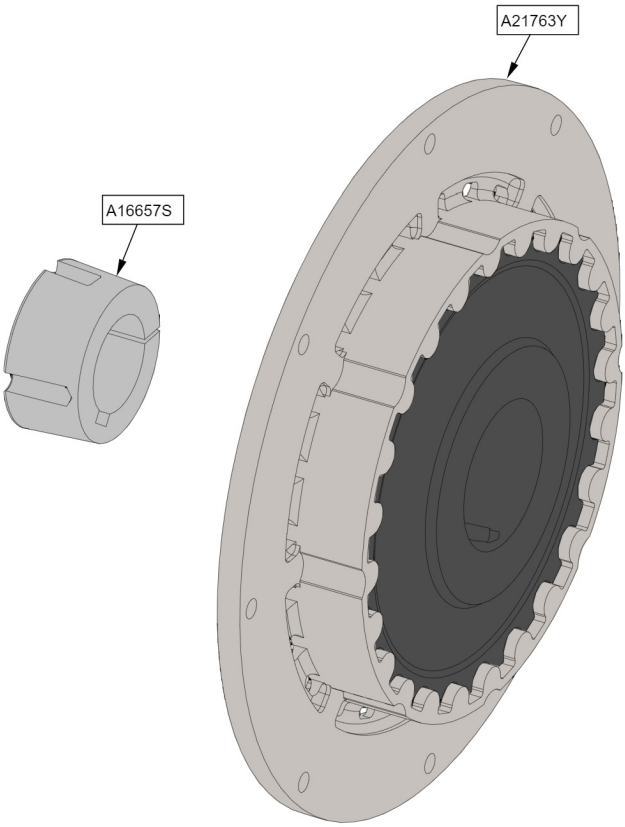

PART NUMBER	DESCRIPTION	QTY
A21763Y-335	**RDD 14" ARCUS AC- T4.SN.F2.14.3030**	**1EA**
A16657S-251-SK	**DODGE 3020 2.50 TPR LCK BUSH**	**1EA**

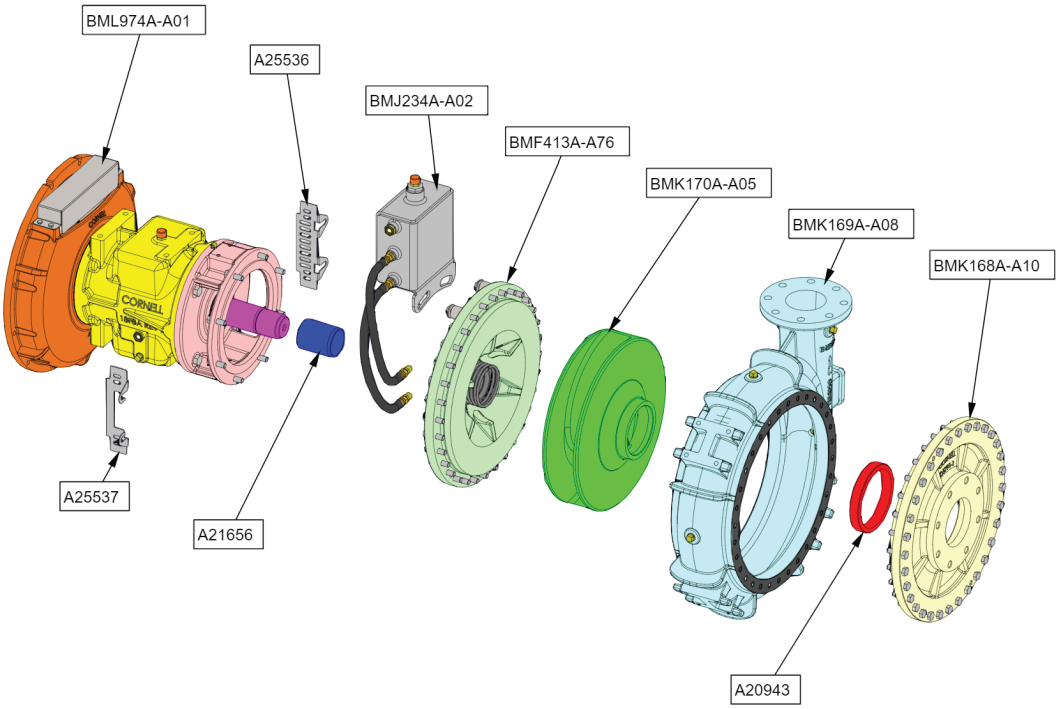

PART NUMBER	PUCK PART NUMBER	DESCRIPTION	QTY
A20943-6-CI	**15-00206-1**	**WEAR RING OPEN 4NHTB**	**1EA**
A21656-15-SS	**15-00489-1**	**SLV 3.00 X 2.62 X 3.75**	**1EA**
BMK168A-A10		**SUCTION COVER 4NHTB DBL BOLT**	**1EA**
BMK169A-A08		**VOLUTE 4NHTB W/CO DBL BOLT**	**1EA**
BMK170A-A05		**IMPELLER 4NHTB**	**1EA**
BMF413A-A76		**BACKPL. 8NHTA 3002S R-D DBLBLT**	**1EA**
BML974A-A01		**FRAME EM 18DBK-1, B5087 SH**	**1EA**
A25536-220-SD		**GUARD D5220 BRACKET NON RUN-DRY SIDE**	**1EA**
A25537-220-SD		**GUARD D5220 BRACKET RUN-DRY SIDE**	**1EA**
BMJ234A-A02		**RESV./FTGS. RUN-DRY (LARGE)**	**1EA**

4NHTB PUMP

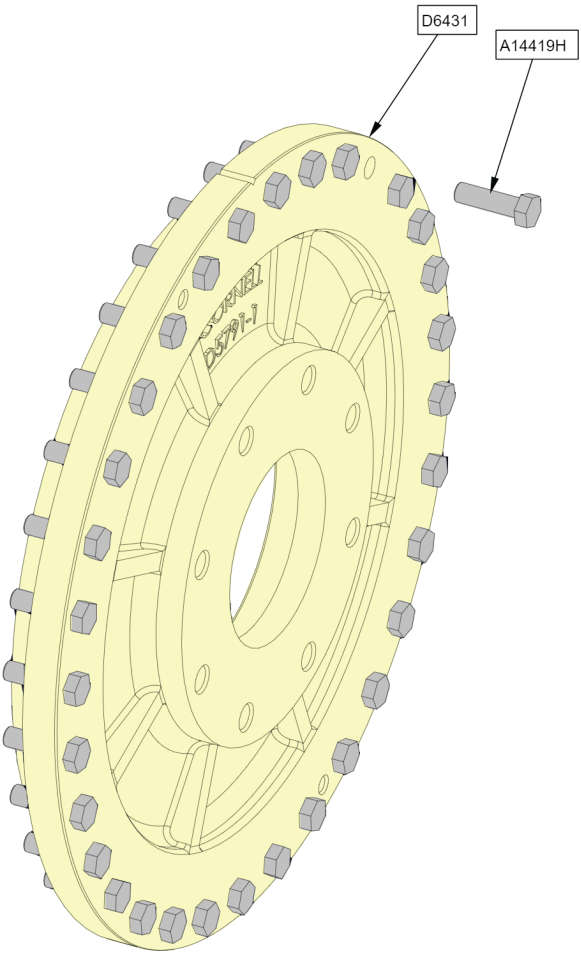

PART NUMBER	PUCK PART NUMBER	DESCRIPTION	QTY
D6431-1-CV	**15-00081-1**	**SUCTION COVER 4NHTB, SBL BOLT.**	**1EA**
A14419H-128-SM		**CPSCR,HEX .50NC X 1.75 GR5**	**32EA**

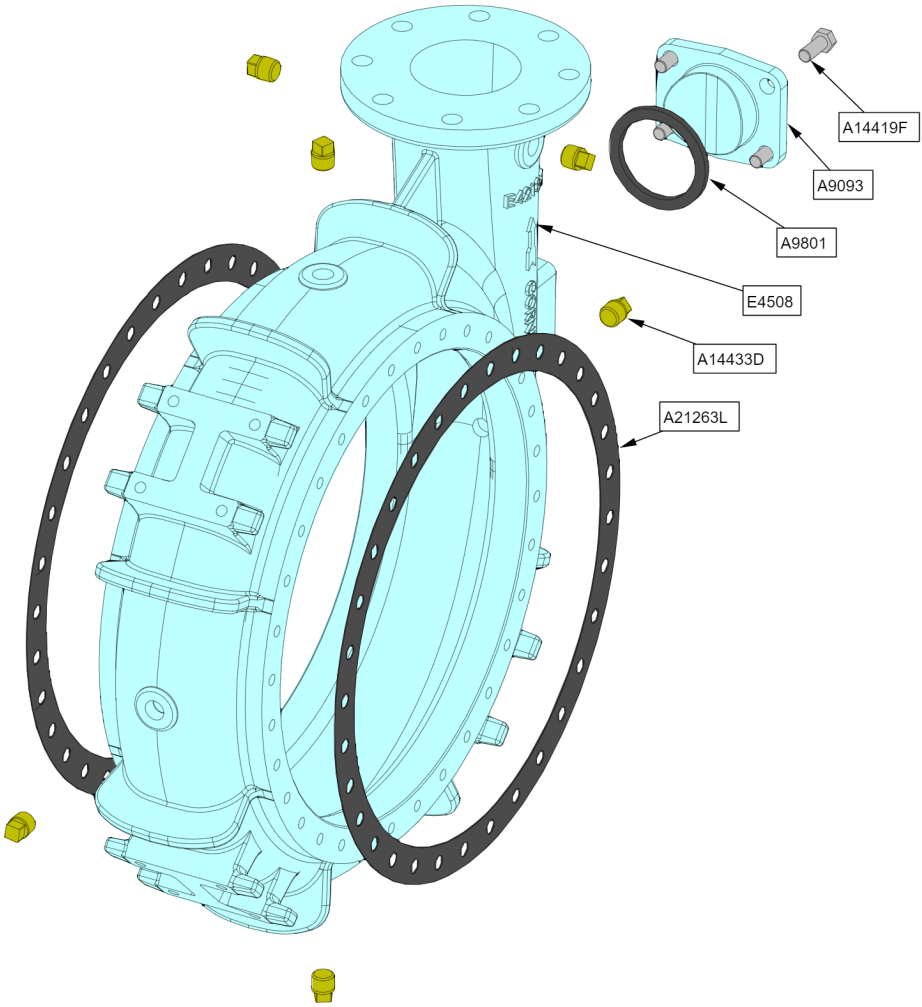

PART NUMBER	PUCK PART NUMBER	DESCRIPTION	QTY
E4508-2-CP	**15-00208-1**	**VOLUTE 4NHTB W/CO, DBL BOLTING**	**1EA**
A21263L-197-GA	**15-00295-11**	**GASKET, VOL 20.5 X 17.75 X .03**	**2EA**
A14433D-56-XS		**PIPE PLUG .50 NPT (SOLID PLUG)**	**6EA**
A9093-94-CI	**15-00270-11**	**CLEANOUT COVER A9093**	**1EA**
A9801-16-EB		**DEFLECTOR/CLEANOUT COVER GASKET**	**1EA**
A14419F-128-SM		**CPSCR, HEX .50NC X 1.25 GR5**	**4EA**

4NHTB PUMP

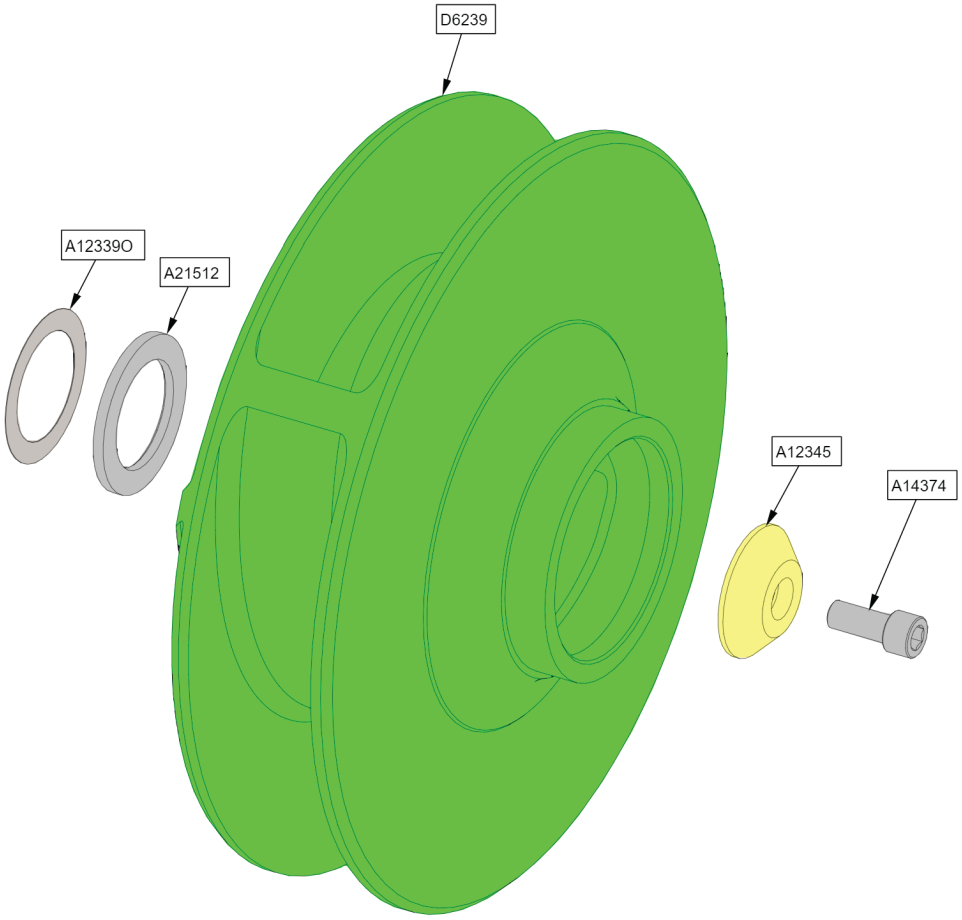

PART NUMBER	PUCK PART NUMBER	DESCRIPTION	QTY
D6239-3-CI-R	**15-00207-11**	**IMPELLER 4NHTB 2.5" COARSE THB**	**1EA**
A12345-13-ST	**15-00203-11**	**IMPELLER WASHER-.66 X 3.00 X .75**	**1EA**
A14374-12-SD	**15-00308-11**	**LOCKSCREW .62NC X 1.50 SOC 18-8**	**1EA**
	15-00410-11	**IMPELLER WASHER-.66 X 3.00 X .75 & LOCKSCREW .62NC X 1.50 SOC 18-8**	**1EA**
A21512-95-SS	**15-00491-11**	**THRUST WASHER 3.63 X 2.50 X .25**	**1EA**
A12339O-107-SDA		**IMPELLER SHIM .015" THICK (AS REQ'D)**	**3EA**
	15-00326-11 **15-00334-11** **15-00355-11**	**.015 Shim** **.005 Shim** **.010 Shim**	

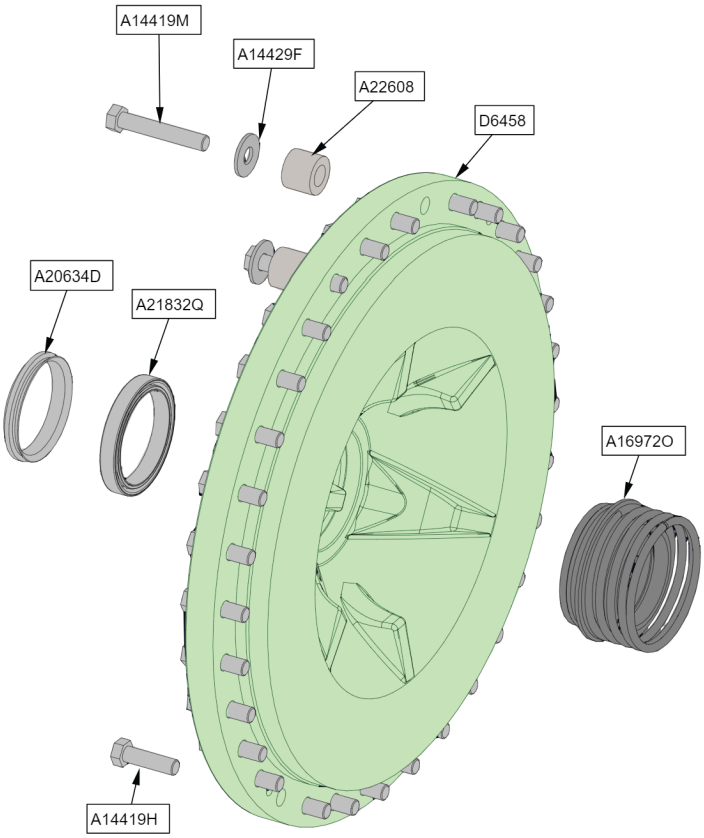

PART NUMBER	PUCK PART NUMBER	DESCRIPTION	QTY
D6458-38-CP	**15-00214-11**	**BACKPL. 8NHTA 3002S**	**1EA**
A14419H-128-SM		**CPSCR, HEX .50NC X 1.75 GR5**	**30EA**
A14419M-128-SM		**CPSCR, HEX .50NC X 3.00 GR5**	**2EA**
A22608-238-SK		**SPACER, .69 ID X 1.25 OD X 1.00 THK**	**2EA**
A14429F-193-SK		**WASHER, PLAIN .50 STEEL**	**2EA**
A16972O-40	**15-00066-11**	**SEAL 3002S RP**	**1EA**
A21832Q-18	**15-00466-11**	**LIP SEAL TRI SEAL 3.00 X 3.75 X .53**	**1EA**
A20634D-16		**V-RING, 400755**	**1EA**

4NHTB PUMP

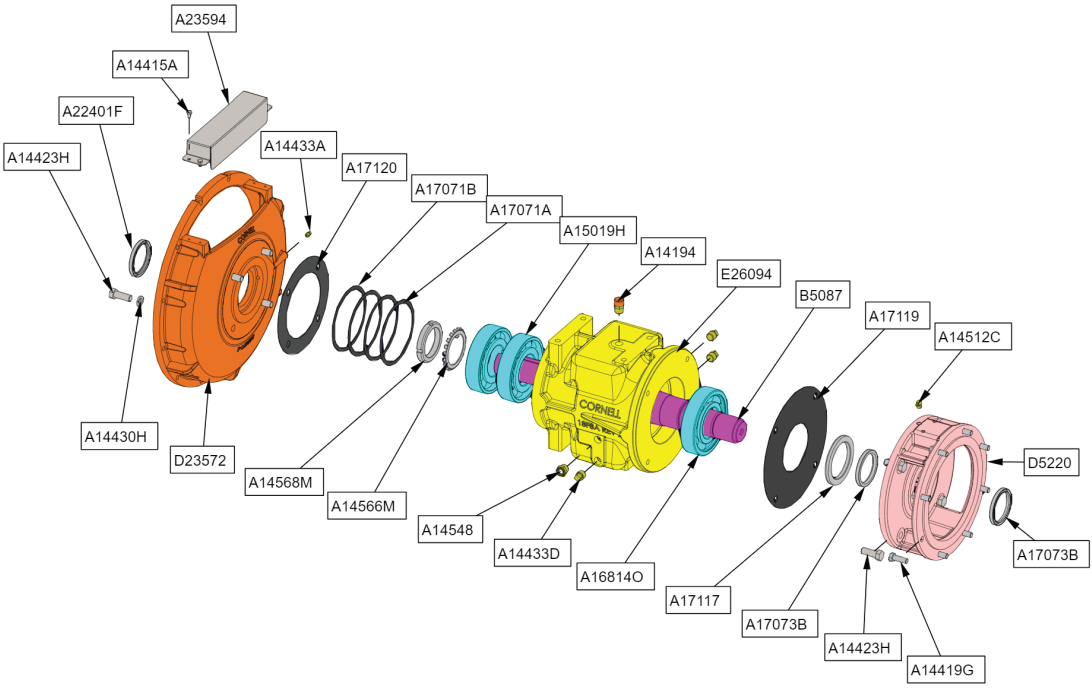

PART NUMBER	PUCK PART NUMBER	DESCRIPTION	QTY
E26094-8-CI		FRAME F18 MACHINED FOR PILOT	1EA
A14194-262-SK		BREATHER .50 NPT	1EA
A14548-188-SK		VIEW GAUGE	1EA
A14433D-56-XS		PIPE PLUG .50 NPT (SOLID PLUG)	3EA
B5087-14-FQ		SHAFT F18 2.5" COARSE THD	1EA
A16814O-20	15-00187-11	BEARING 18B/18DBPE	1EA
A15019H-20	15-00188-11	BEARING 18DBDE	2EA
A14566M-363-SK	15-00127-11	LOCK WASHER W-16	1EA
A14568M-129-SK	15-00144-11	LOCK NUT AN-16	1EA
D5220-4-CI	15-00151-11	BRACKET 95B4	1EA
A17117-44-CI		BRACKET INSERT RING	1EA
A17119-197-GB	15-00139-11	P.E.GASKET (F16K-F18K)	1EA
A14423H-128-SM		CPSCR, HEX .62NC X 1.75 GR5	4EA
A14419G-128-SM		CPSCR, HEX .50NC X 1.50 GR5	8EA
A17073B-18	15-00135-11	LIP SEAL VA504711	2EA
A22401F-18	15-00520-11	LIP SEAL KOK, TC12241, 3.00 X 3.75 X 3.75	1EA
A14512C-154-SK		GREASE FTG .12" NPT 90 DEGREES	1EA
A17071A-107-AS	15-00251-11	SHIM .010 THICK (AS REQ'D)	3EA
A17071B-107-AS	15-00252-11	SHIM .005 THICK (AS REQ'D)	1EA

PART NUMBERS CONT.

PART NUMBER	PUCK PART NUMBER	DESCRIPTION	QTY
A17071B-107-AS	**15-00252-11**	**SHIM .005 THICK (AS REQ'D)**	**1EA**
D23572-4-CI	**15-00176-11**	**ENGINE BRACKET SAE #1**	**1EA**
A14433A-56-XS		**PIPE PLUG .12 NPT (SOLID PLUG)**	**1EA**
A17120-197-GB	**15-00129-11**	**D.E.GASKET (F16K-F18K)**	**1EA**
A14423H-128-SM		**CPSCR,HEX .62NC X 1.75 GR5**	**4EA**
A14430H-363-SK		**WASHER, LOCK 5/8"**	**4EA**
A23594-342-SK		**COVER, SAE 1 ENGINE BRACKET**	**1EA**
A14415A-128-SM		**CPSCR, HEX .25NC X .50 GR5**	**4EA**

4NHTB PUMP

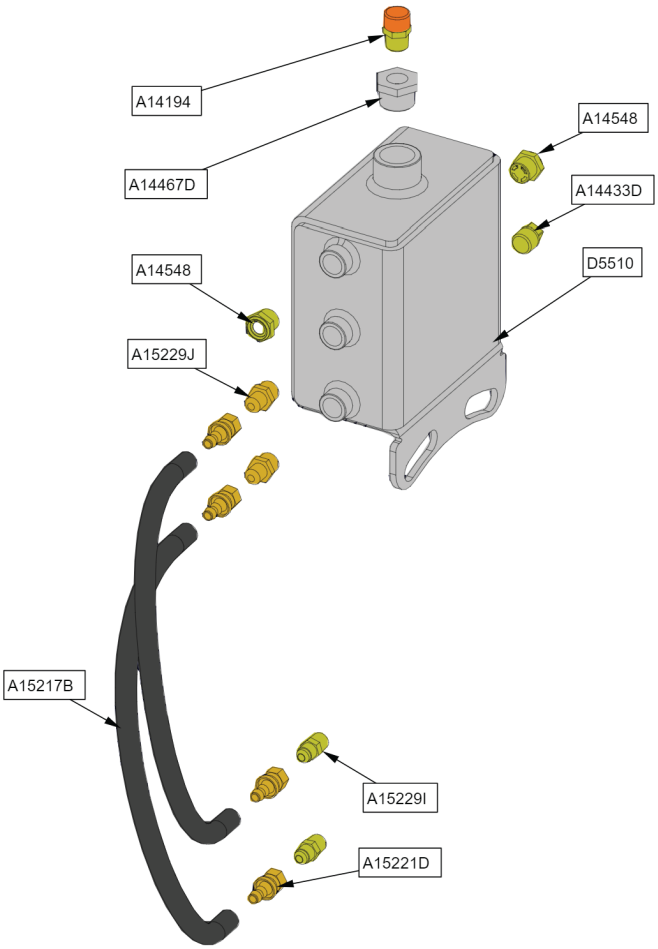

PART NUMBER	DESCRIPTION	QTY
D5510-157-SK	**RESV., SEAL LUBE (LARGE)**	**1EA**
A14548-188-SK	**VIEW GAUGE**	**2EA**
A14194-262-SK	**BREATHER .50 NPT**	**1EA**
A14467D-251-XS	**BUSH 1 .50**	**1EA**
A152291-243-BD	**TUBE FTG- MALE 48 X 6 X 6 FLARED**	**2EA**
A15229J-243-BD	**TUBE FTG 48 - 6 X 8 MALE FLARED**	**2EA**
A15221D-422-BD	**FITTING HOSE - 45D FLARE SWIVEL**	**4EA**
A15217B-421-EB	**HOSE .38 ID**	**48EA**
A14433D-56-XS	**PIPE PLUG .50 NPT (SOLID PLUG)**	**2EA**

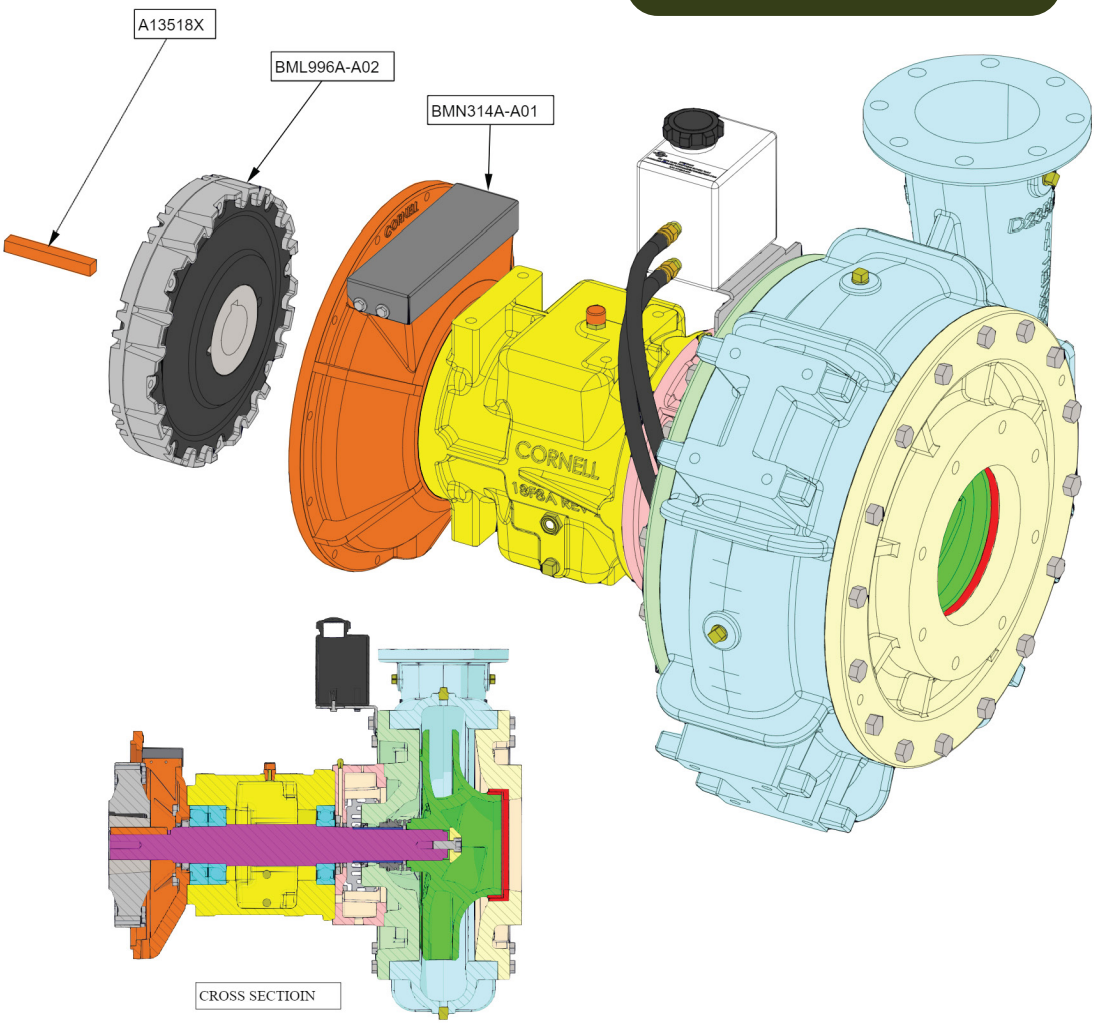

PART NUMBER	DESCRIPTION	QTY
BMN314A-A01	**6NHTB19-EM18DBK-2 3002S RUN-DRY**	**1EA**
BML996A-A02	**RDD 11.5" HI TORQUE ARCUSAFLEX 2.5" BORE**	**1EA**
A13518X-28-KS	**KEY .62 X 4.75**	**1EA**

6NHTB PUMP

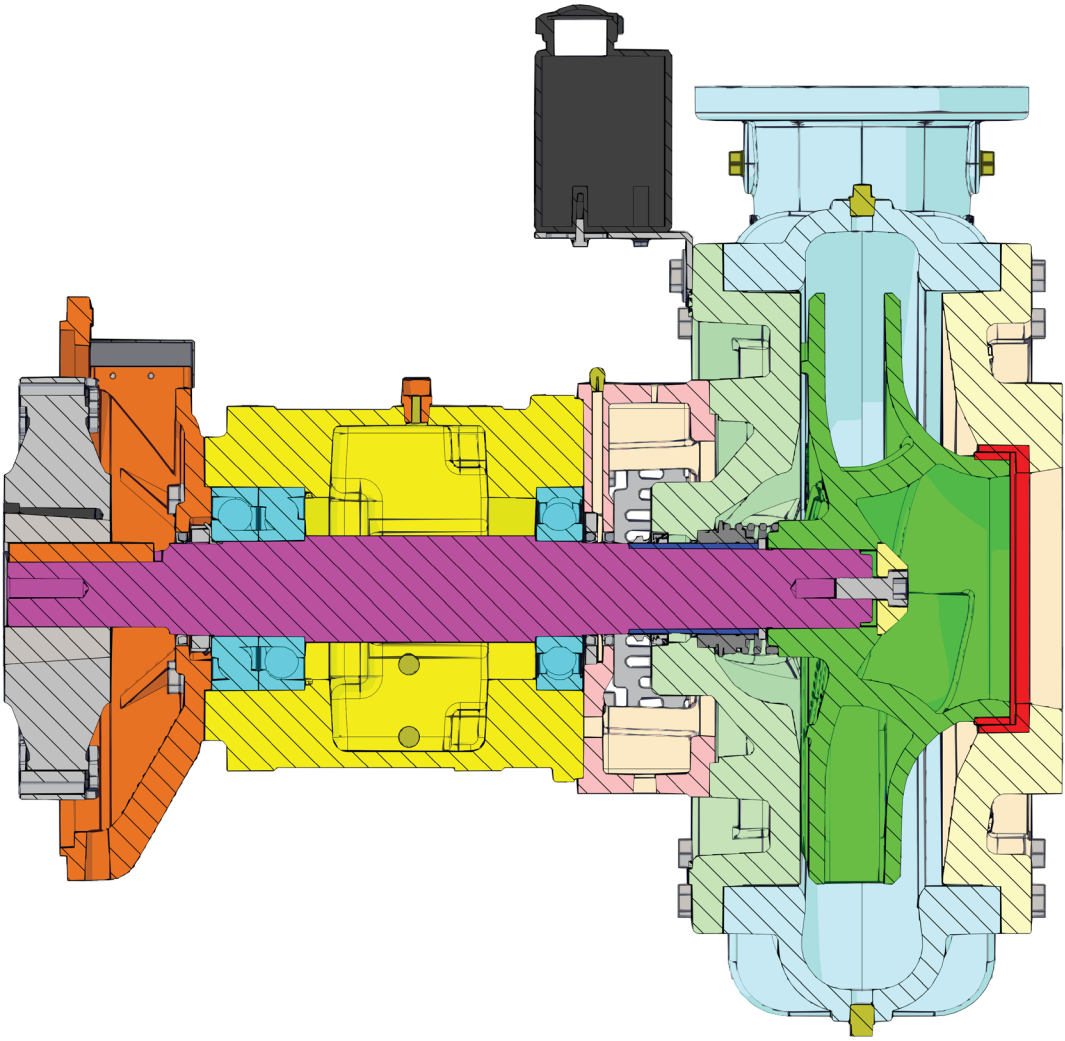

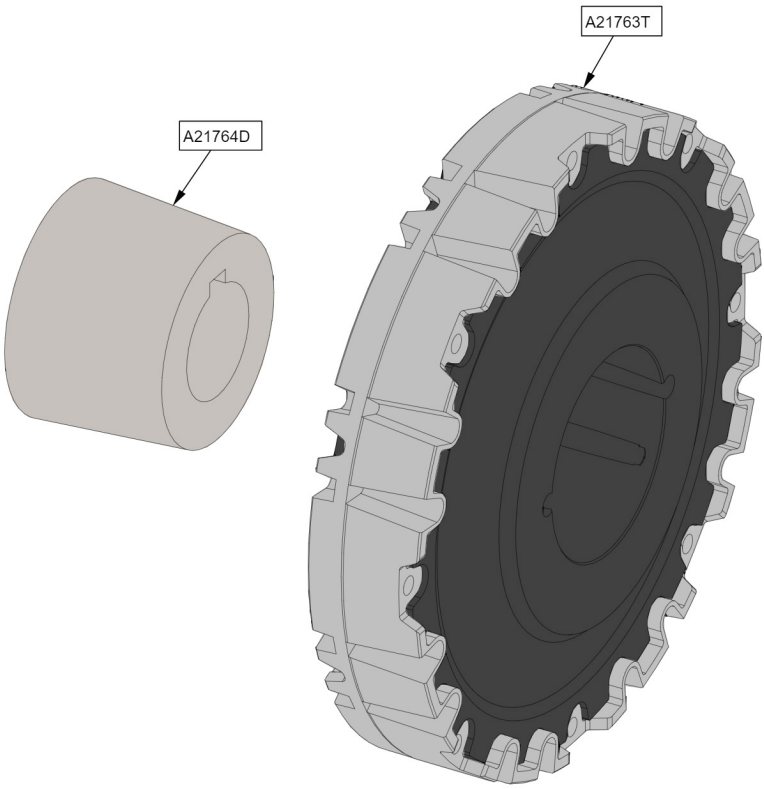

PART NUMBER	DESCRIPTION	QTY
A21763T-335	**RDD 11.5" ARCUS AC- T5.NN. F2.11.5.3535**	**1EA**
A21764D-251-SK	**DODGE 3535 2.50 TPR LCK BUSH**	**1EA**

6NHTB PUMP

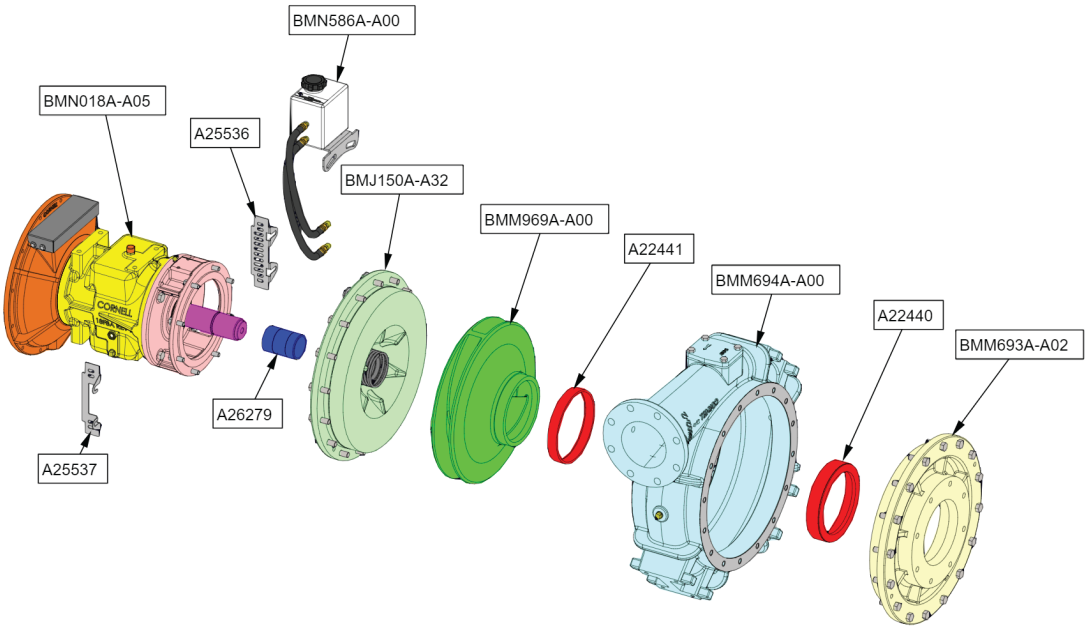

PART NUMBER	PUCK PART NUMBER	DESCRIPTION	QTY
A22440-6-SG	**15-00146-11**	**WEAR RING CASE 9.50 X 9.0 X 7.63 X 1.69 L-SHAPED (450-500)**	**1EA**
A22441-6-SG	**15-00235-11**	**WEAR RING IMP 8.97 X 8.475 X 1.19 (350-400 BHN)**	**1EA**
A26279-15-FHA	**15-00440-11**	**SLV 3.00 X 2.62 X 4.25 UNDERCUT**	**1EA**
BMM693A-A02		**SUCTION COVER 6NHTC19 (DBL WR)**	**1EA**
BMM694A-A00		**VOLUTE 6NHTB19**	**1EA**
BMM969A-A00		**IMPELLER 6NHTB19 THD'D BORE**	**1EA**
BMJ150A-A32		**BACKPLATE 14NH 3002S R-D**	**1EA**
BMN018A-A05		**FRAME EM 18DBK-2 B5205 SH THD**	**1EA**
A25536-220-SD		**GUARD D5220 BRACKET NON RUN-DRY SIDE**	**1EA**
A25537-220-SD		**GUARD D5220 BRACKET RUN-DRY SIDE**	**1EA**
BMN586A-A00		**RESV./FTGS RUN-DRY**	**1EA**

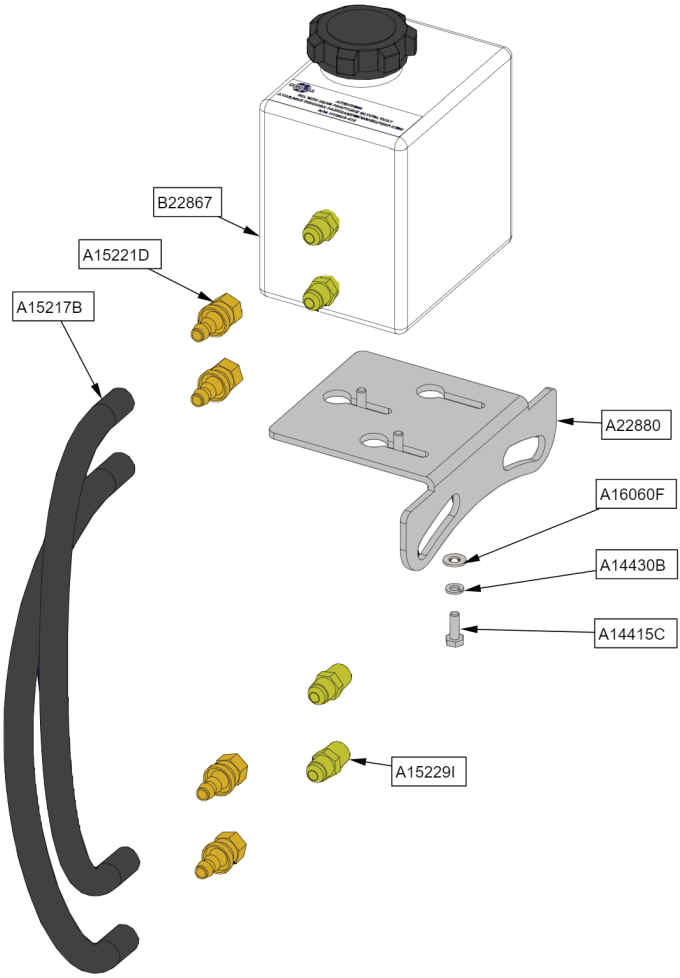

PART NUMBER	PUCK PART NUMBER	DESCRIPTION	QTY
B22867-157	**15-00264-11**	**RESERVOIR W/CAP, RUN-DRY (PLASTIC)**	**1EA**
A22880-384-SK	**15-00445-11**	**BRACKET, RUN-DRY RESV, BLACK, .50 & .72 SCREW**	**1EA**
A16060F-193-SK		**WASHER, SAE .25**	**3EA**
A14430B-363-SK		**WASHER, LOCK .25**	**3EA**
A14415C-128-SM		**CPSCR, HEX .25NC X .75 GR5**	**3EA**
A152291-243-BD		**TUBE FTG - MALE 48 X 6 X 6 FLARED**	**2EA**
A15221D-422-BD		**FITTING HOSE- 45D FLARE SWIVEL**	**4EA**
A15217B-421-EB		**HOSE .38 ID**	**48IN**

6NHTB PUMP

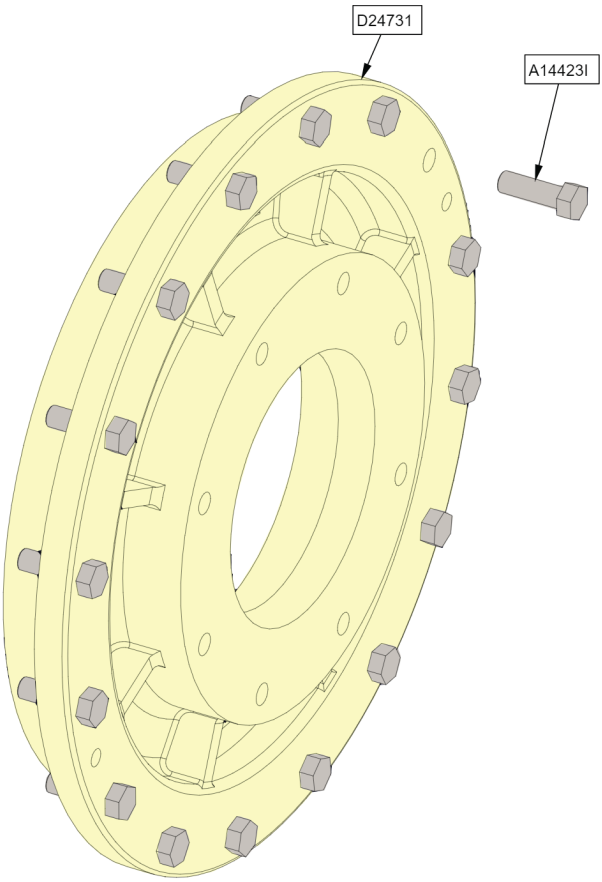

PART NUMBER	PUCK PART NUMBER	DESCRIPTION	QTY
D24731-1-CV	**15-00319-11**	**SUCTION COVER 6NHTB19/6N-HTC19 MACHINE**	**1EA**
A14423I-128-SM		**CPSCR, HEX .62NC X 2.00 GR5**	**16EA**

6NHTB

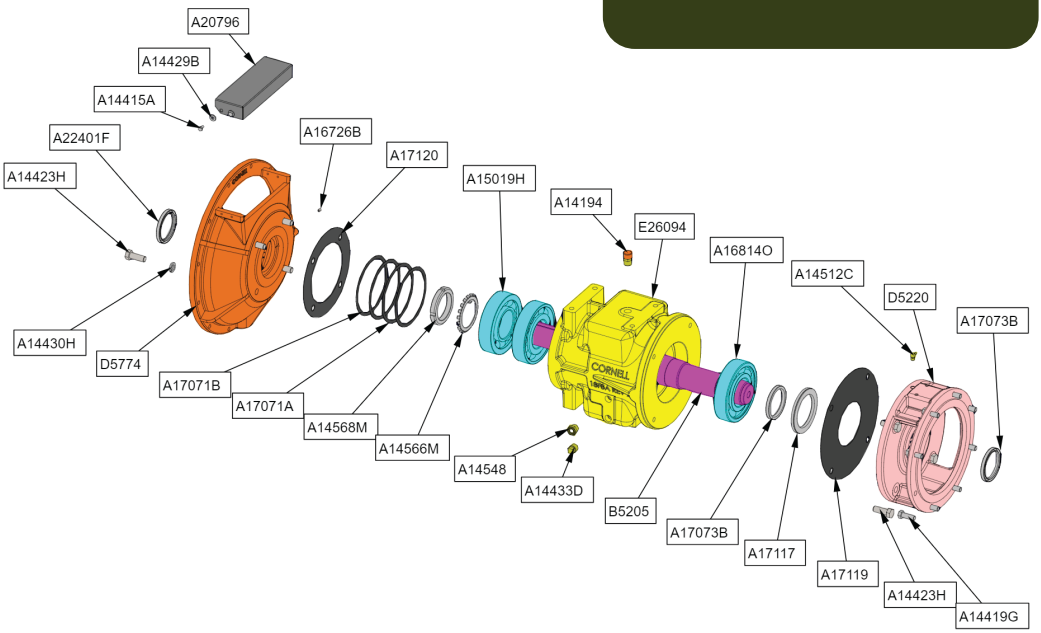

PART NUMBER	PUCK PART NUMBER	DESCRIPTION	QTY
E26094-8-CI		FRAME F18 MACHINED FOR PILOT	1EA
A14194-262-SK		BREATHER .50 NPT	1EA
A14548-188-SK		VIEW GAUGE	1EA
A14433D-56-XS		PIPE PLUG .50 NPT (SOLID PLUG)	3EA
B5205-14-FH	15-00498-11	SHAFT F18RP THREADED 6NHTB	1EA
A16814O-20	15-00187-11	BEARING 18B/18DBPE	1EA
A15019H-20	15-00188-11	BEARING 18DBDE	2EA
A14566M-363-SK	15-00127-11	LOCK WASHER W-16	1EA
A14568M-129-SK	15-00144-11	LOCK NUT AN-16	1EA
D5220-4-CI	15-00151-11	BRACKET 95B4	1EA
A17117-44-CI		BRACKET INSERT RING	1EA
A17119-197-GB	15-00139-11	P.E.GASKET (F16K-F18K)	1EA
A14423H-128-SM		CPSCR,HEX .62NC X 1.75 GRS	4EA
A14419G-128-SM		CPSCR,HEX .50NC X 1.50 GR5	8EA
A17073B-18		LIP SEAL VA504711	2EA
A22401F-18		LIP SEAL KOK, TC12241, 3.00 X 3.75 X 3.75	1EA
A14512C-154-SK		GREASE FTG .12"NPT 90 DEGREE	1EA
A17071A-107-AS	15-00251-11	SHIM .010 THICK (AS REQ'D)	3EA
A17071B-107-AS	15-00252-11	SHIM .005 THICK (AS REQ'D)	1EA
D5774-4-CI	15-00096-11	ENGINE BRACKET SAE #2 (D5773)	1EA
A17120-197-GB	15-00129-11	D.E.GASKET (F16K-F18K)	1EA
A14423H-128-SM		CPSCR,HEX .62NC X 1.75 GR5	4EA

6NHTB PUMP

PART NUMBERS CONT.

PART NUMBER	PUCK PART NUMBER	DESCRIPTION	QTY
A14430H-363-SK		**WASHER, LOCK 5/8"**	**4EA**
A16726B-149-SM		**SET SCREW, SOC HD .25-28NF X .38 LG. CUP POINT**	**1EA**
A20796-342-SD		**COVER, SAE #2 & #3 (R-P BRKT)**	**1EA**
A14415A-128-SM		**CPSCR, HEX .25NC X .50 GR5**	**4EA**
A14429B-193-SK		**WASHER, PLAIN .25 STEEL**	**4EA**

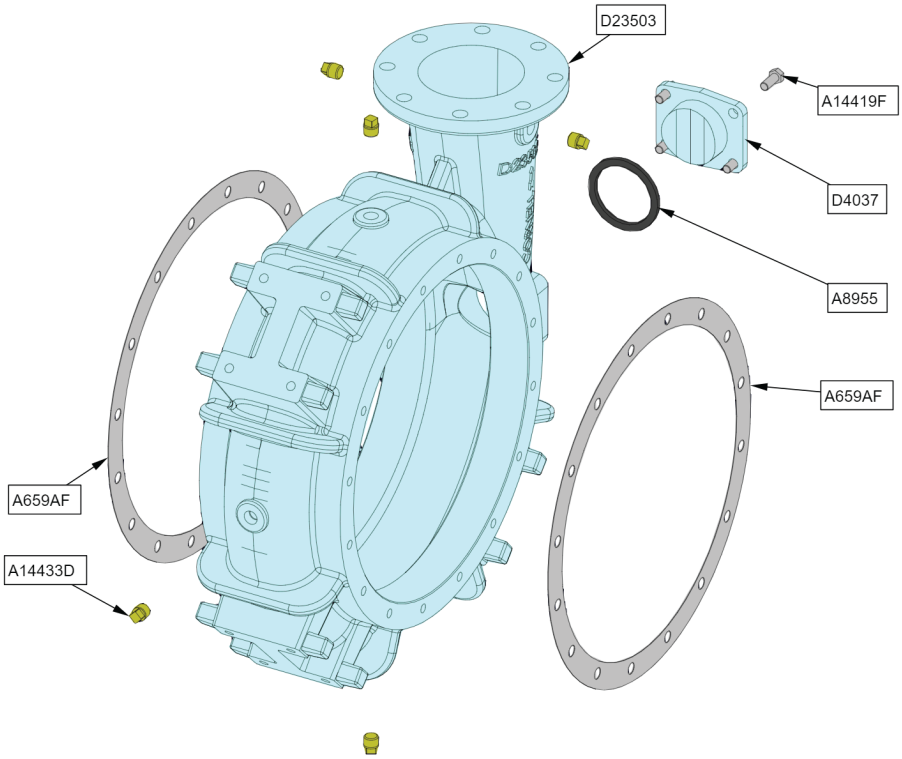

PART NUMBER	PUCK PART NUMBER	DESCRIPTION	QTY
D23503-2-CP	**15-00348-11**	**VOLUTE, 6NHTB19 (MACHINE)**	**1EA**
A659AF-197-GA	**15-00145-11**	**VOL. GASKET**	**2EA**
A14433D-56-XS		**PIPE PLUG .50 NPT (SOLID PLUG)**	**5EA**
D4037-94-CP	**15-00122-11**	**CLEANOUT COVER D4037**	**1EA**
A8955-197-EN		**GASKET (CLEAN-OUT COVER)**	**1EA**
A14419F-128-SM		**CPSCR,HEX .50NC X 1.25 GR5**	**4EA**

6NHTB PUMP

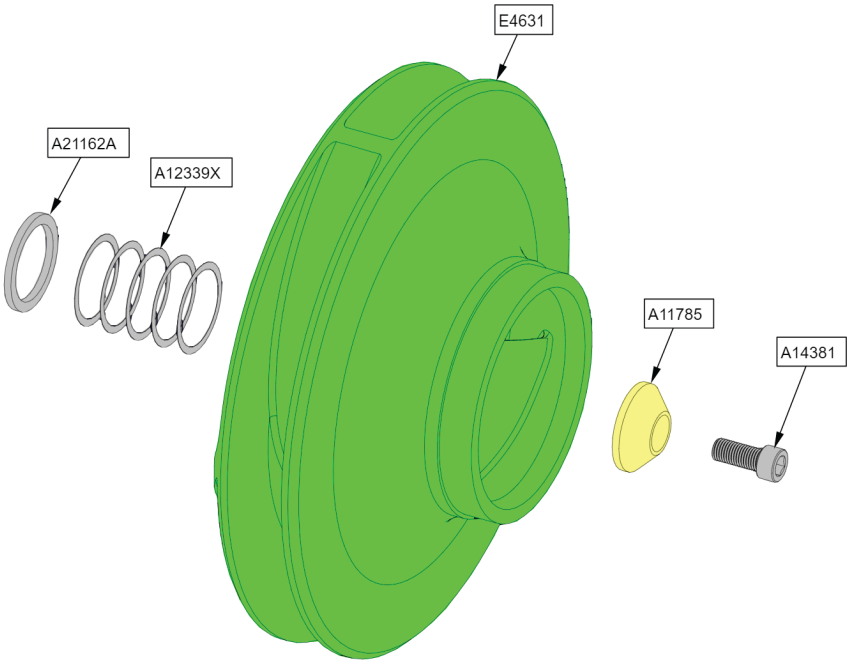

PART NUMBER	PUCK PART NUMBER	DESCRIPTION	QTY
E4631-3-CV-R	**15-00069-11**	**IMPELLER 6NHTB19MACH THD'D**	**1EA**
A11785-13-ST	**15-00143-11**	**IMPELLER WASHER-.77 X 3.00 X 1.00**	**1EA**
A14381-12-SD	**15-00172-11**	**LOCKSCREW .75NC X 1.75 SOC 18-8**	**1EA**
A21162A-193-ST	**15-00257-11**	**THRUST WASHER 3.31 X 2.64 X .25**	**1EA**
A12339X-107-SDA	**15-00256-11**	**IMPELLER SHIM .015" THICK (AS REQ'D)**	**1EA**
A12339X-107-SDA-005	**15-00255-11**	**IMPELLER SHIM .005" THICK**	**1EA**
A12339X-107-SDA-010	**15-00254-11**	**IMPELLER SHIM .010" THICK**	**1EA**

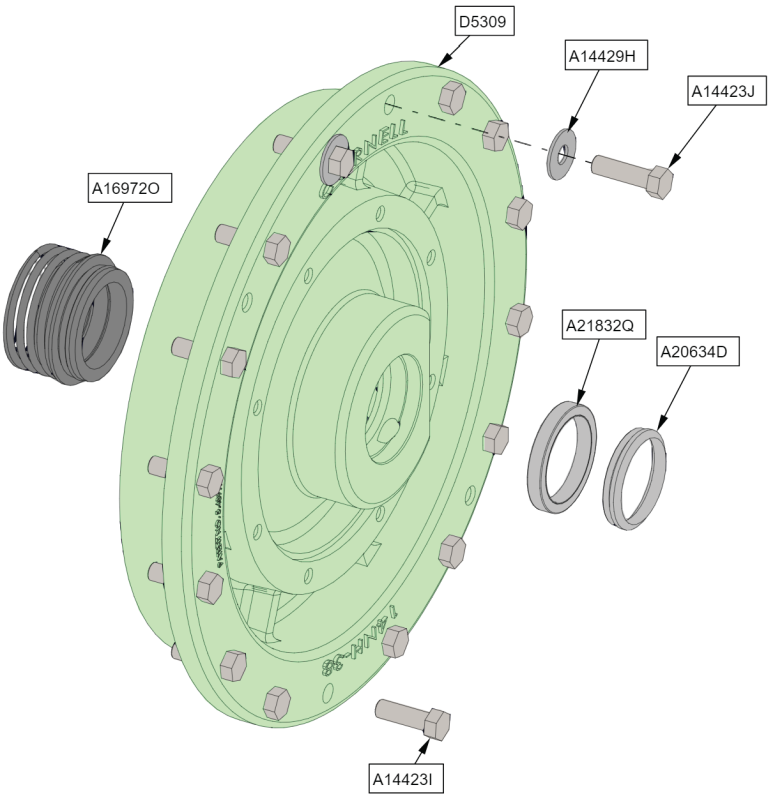

PART NUMBER	PUCK PART NUMBER	DESCRIPTION	QTY
D5309-38-CP	**15-00239-11**	**BACKPLATE 14NH-38**	**1EA**
A16972O-40	**15-00066-11**	**SEAL 3002S RP**	**1EA**
A14423I-128-SM		**CPSCR, HEX .62NC X 2.00 GR5**	**14EA**
A14423J-128-SM		**CPSCR, HEX .62NC X 2.25 GR5**	**2EA**
A14429H-193-SK		**WASHER, PLAIN .62 STEEL**	**2EA**
A21832Q-18	**15-00466-11**	**LIP SEAL TRI SEAL 3.00 X 3.75 X .53**	**1EA**
A20634D-16		**V-RING, 400755**	**1EA**

6819MPC PUMP

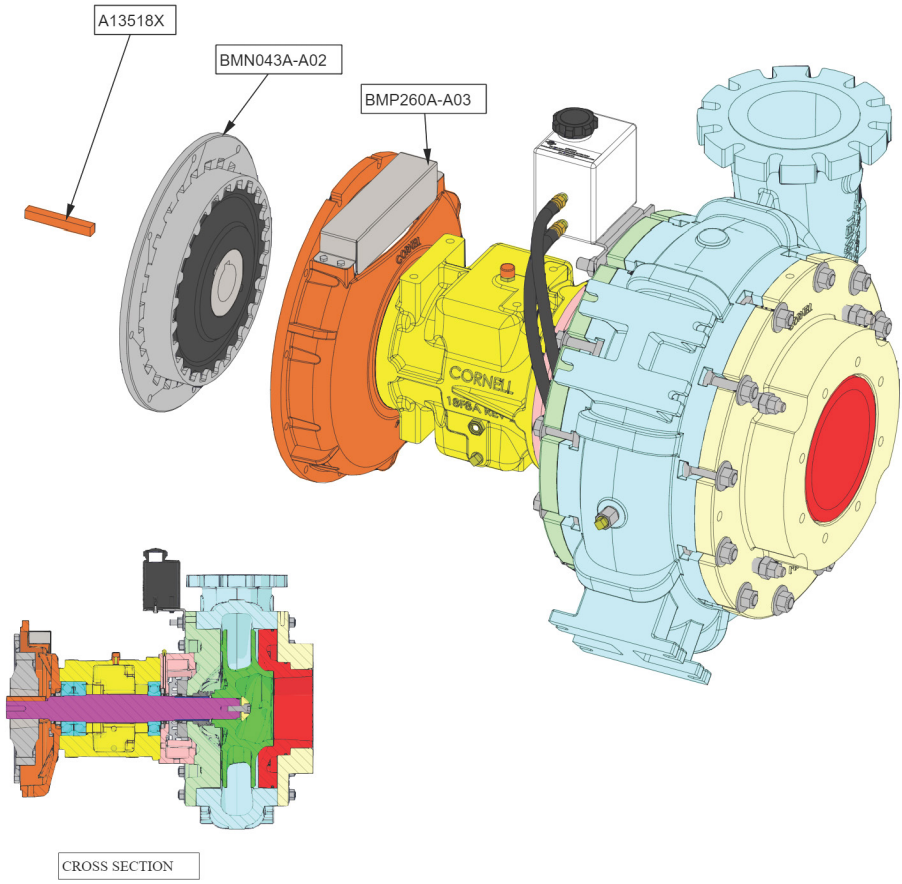

PART NUMBER	PUCK PART NUMBER	DESCRIPTION	QTY
BMP260A-A03	**15-00197-11**	**6819MPC-CAC-EM18DBK-1, CYC, R-D, THD**	**1EA**
BMN043A-A02	**15-00100-11**	**14"RDD ARCUS AC-T5.SN W/2.5" TPR BUSH**	**1EA**
A13518X-28-KS		**KEY .62 X 4.75**	**1EA**

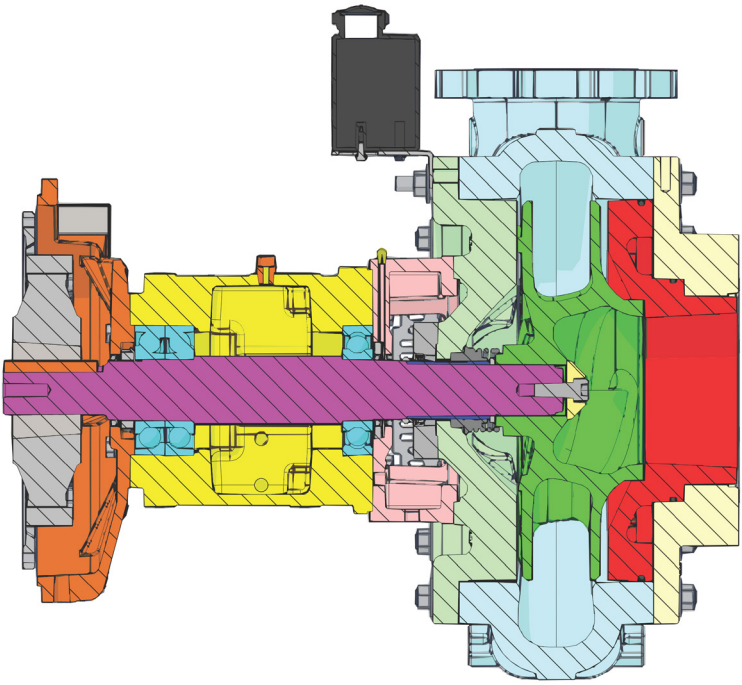

6819MPC PUMP

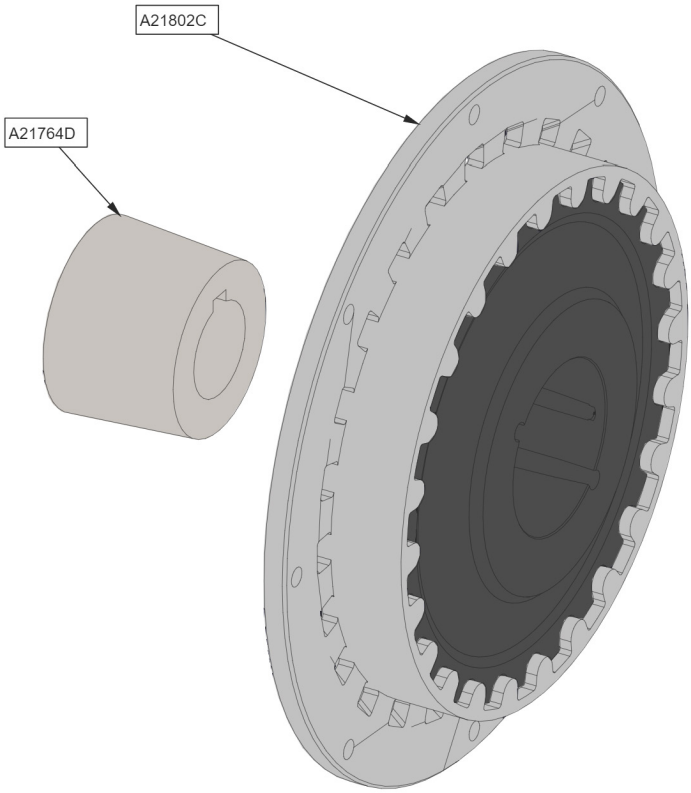

PART NUMBER	PUCK PART NUMBER	DESCRIPTION	QTY
A21802C-335		**RDD 14" ARCUS AC- T5.SN.F2 14.3535**	**1EA**
A21764D-251-SK	**15-00400-11**	**DODGE 3535 2.50 TPR LCK BUSH**	**1EA**

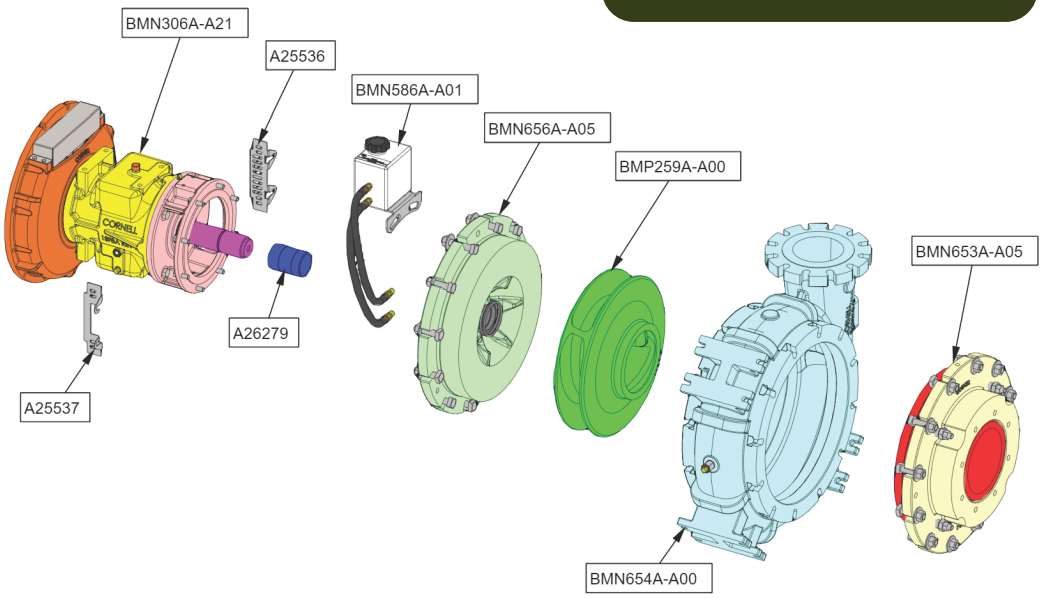

PART NUMBER	PUCK PART NUMBER	DESCRIPTION	QTY
A26279-15-FHA	**15-00440-11**	**SLV 3.00 X 2.62 X 4.25 UNDERCUT**	**1EA**
BMN653A-A05		**SUCTION COVER 6819MPC**	**1EA**
BMN654A-A00		**VOLUTE, 6819MP**	**1EA**
BMP259A-A00		**IMPELLER 6819MP**	**1EA**
BMN656A-A05		**BACKPLATE, 6819MP FLOWSERVE SEAL**	**1EA**
BMN306A-A21		**FRAME EM18DBK-1 B24968 SH THRD**	**1EA**
A25536-220-SD		**GUARD D5220 BRACKET NON RUN-DRY SIDE**	**1EA**
A25537-220-SD		**GUARD D5220 BRACKET RUNDRY SIDE**	**1EA**
BMN586A-A01		**RESV/FTGS RUN-DRY (PLASTIC)**	**1EA**

6819MPC PUMP

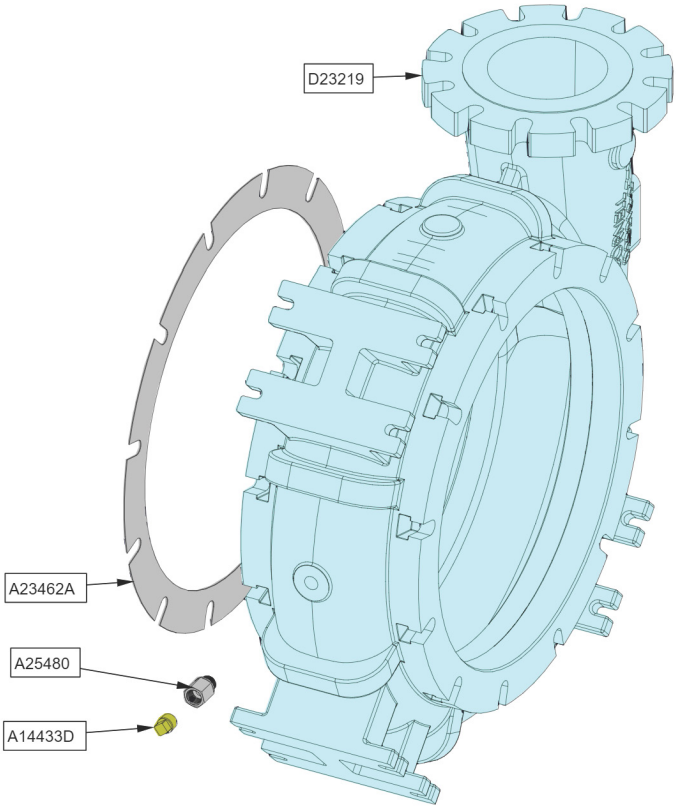

PART NUMBER	PUCK PART NUMBER	DESCRIPTION	QTY
D23219-2-CAC	**15-00280-11**	**VOLUTE, 6819MP**	**1EA**
A23462A-197-GA		**GASKET, 19.63 X 24 X .03**	**1EA**
A25480-251-SK		**PIPE BUSHING, 1/2" NPT FEMALE X 1/2" BSPP MALE**	**1EA**
A14433D-56-XS		**PIPE PLUG .50 NPT (SOLID PLUG)**	**1EA**

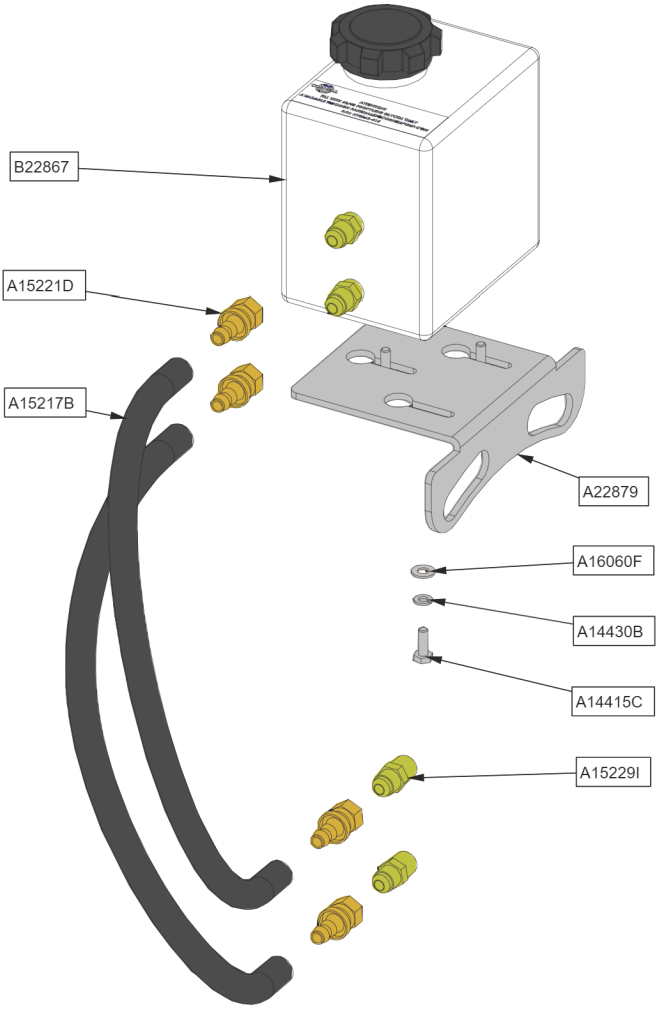

PART NUMBER	PUCK PART NUMBER	DESCRIPTION	QTY
B22867-157	**15-00264-11**	**RESERVOIR, RUN-DRY (PLASTIC)**	**1EA**
A22879-384-SK		**BRACKET, RUN-DRY RESV, GRAY, .75 SCREW**	**1EA**
A16060F-193-SK		**WASHER, SAE .25**	**3EA**
A14430B-363-SK		**WASHER, LOCK .25**	**3EA**
A14415C-128-SM		**CPSCR, HEX .25NC X .75 GR5**	**3EA**
A15229I-243-BD		**TUBE FTG - MALE 48 X 6 X 6 FLARED**	**2EA**
A15221D-422-BD		**FITTING HOSE -45D FLARE SWIVEL**	**4EA**
A15217B-421-EB		**HOSE .38 ID**	**48IN**

6819MPC PUMP

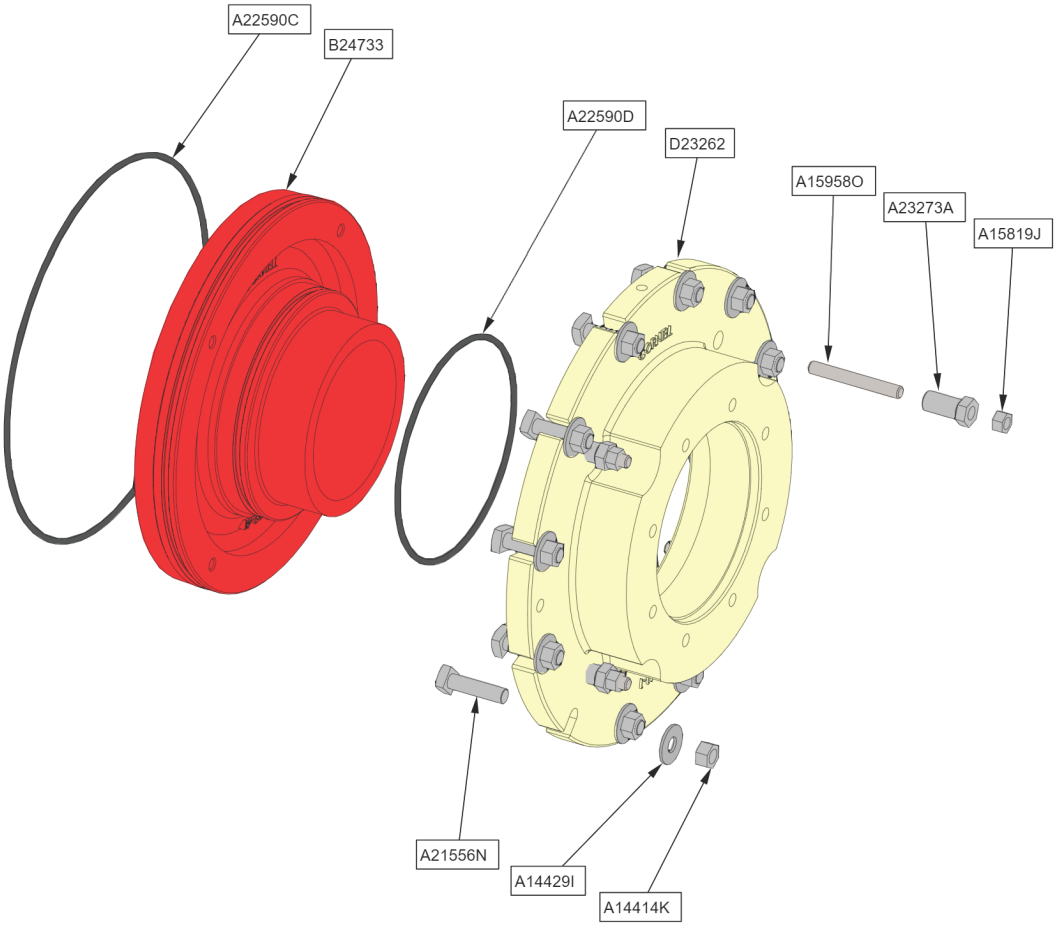

PART NUMBER	PUCK PART NUMBER	DESCRIPTION	QTY
D23262-1-CV	**15-00040-11**	**SUCTION COVER, 6819MP (MACHINE)**	**1EA**
B24733-41-CAC	**15-00294-11**	**WEAR PLATE, 6819MPC (MACHINE)**	**1EA**
A22590C-59-EV	**15-00042-11**	**O-RING, 19.00 X 19.50 X .25 (2-467)**	**1EA**
A22590D-59-EV	**15-00037-11**	**O-RING, 10.97 X 11.52 X .28 (2-451)**	**1EA**
A23273A-251-SK	**15-00284-11**	**CPSCR. ADJUST. BUSHING 1-12NF**	**4EA**
A15958O-433-SM	**15-00403-11**	**STUD, .62-11NC X 5.00 ALL THREAD**	**4EA**
A15819J-362-SM		**NUT, .62 NEX**	**4EA**
A21556N-128-SM		**.75NC X 3.00 SQR HEAD, GR5**	**12EA**
A14414K-362-SK		**NUT, .75 NC HEAVY HEX STEEL**	**12EA**
A14429I-193-FS		**WASHER, PLAT .75 (GRADE 8)**	**12EA**

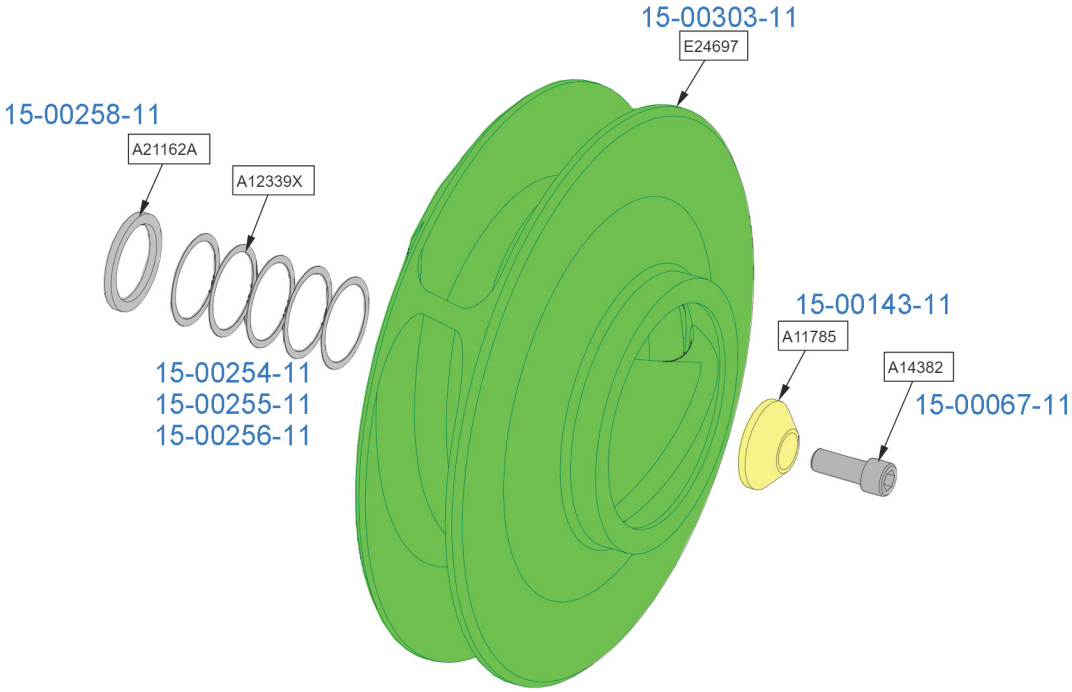

PART NUMBER	PUCK PART NUMBER	DESCRIPTION	QTY
E24697-3-CAC-R	**15-00303-11**	**IMPELLER 6819MPC**	**1EA**
A11785-13-ST	**15-00143-11**	**IMPELLER WASHER- .77 X 3.00 X 1.00**	**1EA**
A14382-12-SD	**15-00067-11**	**LOCKSCREW .75NC X 2.00 SOC 18-8**	**1EA**
A21162A-193-FHA	**15-00258-11**	**THRUST WASHER 3.31 X 2.64 X .25**	**1EA**
A12339X-107-SDA	**15-00254-11**	**IMPELLER SHIM .015" THICK (AS REQ'D)**	**3EA**
A12339X-107-SDA-005	**15-00255-11**	**IMPELLER SHIM .005" THICK**	**1EA**
A12339X-107-SDA-010	**15-00256-11**	**IMPELLER SHIM .010" THICK**	**1EA**

6819MPC PUMP

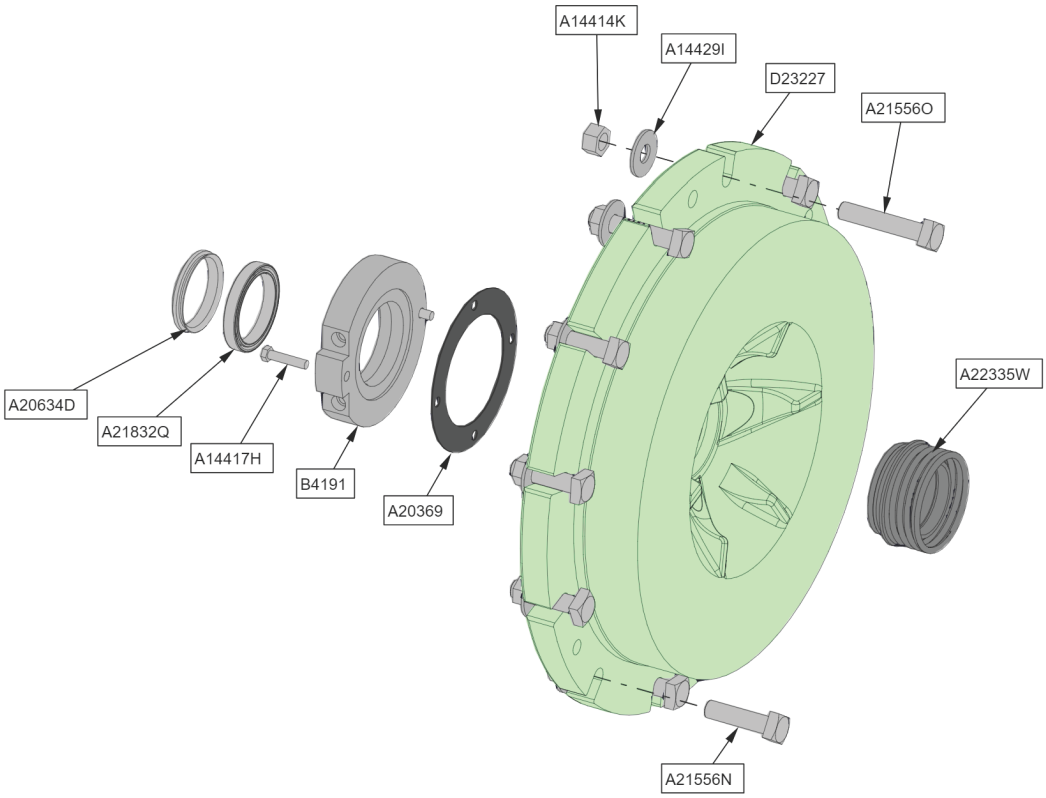

PART NUMBER	PUCK PART NUMBER	DESCRIPTION	QTY
D23227-38-CAC	**15-00282-11**	**BACKPLATE, 6819MP**	**1EA**
A22335W-40	**15-00064-11**	**SEAL T52, SC ROT/TC STATIONARY, VITON, FLOWSERVE**	**1EA**
A21556N-128-SM		**.75NC X 3.00 SQR HEAD, GR5**	**10EA**
A21556O-128-SM		**.75NC X 4.00 SQR HEAD, GR5**	**2EA**
A14414K-362-SK		**NUT, .75 NC HEAVY HEX STEEL**	**12EA**
A14429I-193-FS		**WASHER, FLAT .75 (GRADE 8)**	**12EA**
B4191-5A-CI	**15-00336-11**	**SEAL GLAND 2.5" & 3.0" RUN-DRY**	**1EA**
A20369-197-GB	**15-00152-11**	**GASKET 7.0 X 4.81 X .03 THK**	**1EA**
A21832Q-18	**15-00466-11**	**LIP SEAL TRI SEAL 3.00 X 3.75 .53**	**1EA**
A20634D-16	**15-00337-11**	**V-RING, 400755**	**1EA**
A14417H-128-SM		**CPSCR, HEX .38NC X 1.75 GR5**	**2EA**

6819MPC

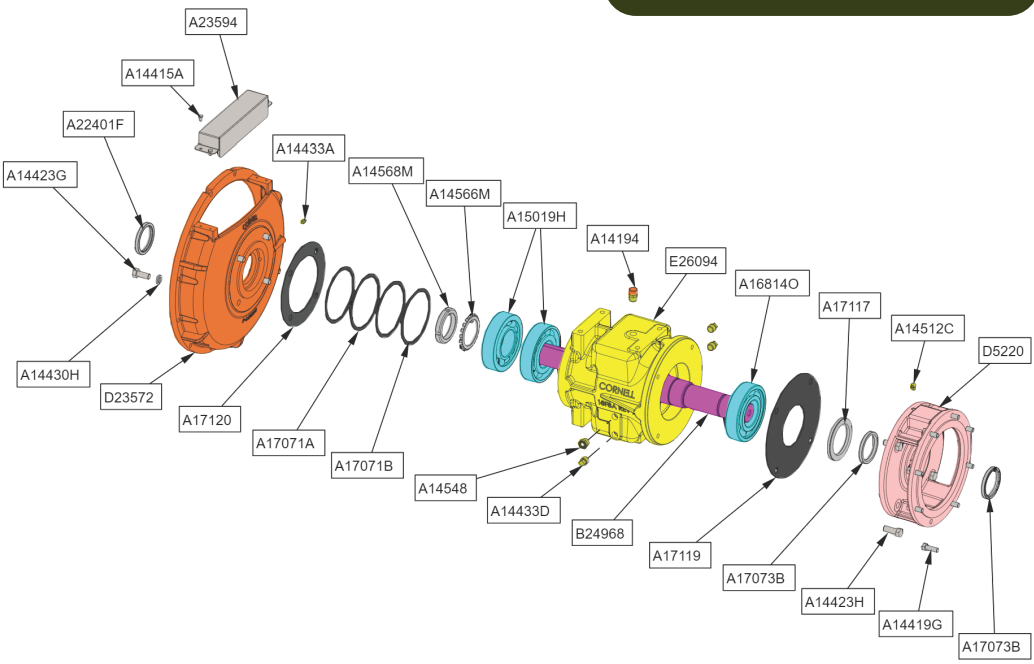

PART NUMBER	PUCK PART NUMBER	DESCRIPTION	QTY
E26094-8-CI	**15-00082-11**	**FRAME F18 MACHINED FOR PILOT**	**1EA**
A14194-262-SK	**15-00180-11**	**BREATHER .50 NPT**	**1EA**
A14548-188-SK	**15-00566-11**	**VIEW GAUGE**	**1EA**
A14433D-56-XS		**PIPE PLUG .50 NPT (SOLID PLUG)**	**3EA**
B24968-14-FH		**SHAFT EM18 R-P, 6819MP**	**1EA**
A16814O-20	**15-00187-11**	**BEARING 18B/18DBPE**	**1EA**
A15019H-20	**15-00188-11**	**BEARING 18DBDE**	**2EA**
A14566M-363-SK	**15-00127-11**	**LOCK WASHER W-16**	**1EA**
A14568M-129-SK	**15-00144-11**	**LOCK NUT AN-16**	**1EA**
D5220-4-CV	**15-00283-11**	**BRACKET 95B4**	**1EA**
A17117-44-CI	**15-00339-11**	**BRACKET INSERT RING**	**1EA**
A17119-197-GB	**15-00139-11**	**P.E.GASKET (F16K-F18K)**	**1EA**
A14423H-128-SM		**CPSCR,HEX .62NC X 1.75 GR5**	**4EA**
A14419G-128-SM		**CPSCR, HEX .50NC X 1.50 GR5**	**8EA**
A17073B-18	**15-00135-11**	**LIP SEAL VA504711**	**2EA**
A22401F-18	**15-00520-11**	**LIP SEAL KOK, TC12241, 3.00 X 3.75 X .375**	**1EA**
A14512C-154-SK		**GREASE FTG .12" NPT 90 DEGREE**	**1EA**
A17071A-107-AS	**15-00251-11**	**SHIM .010 THICK (AS REQ'D)**	**3EA**
A17071B-107-AS	**15-00252-11**	**SHIM .005 THICK (AS REQ'D)**	**1EA**
D23572-4-CI		**ENGINE BRACKET SAE #1**	**1EA**

6819MPC PUMP

PART NUMBERS CONT.

PART NUMBER	PUCK PART NUMBER	DESCRIPTION	QTY
A14433A-56-XS		**PIPE PLUG .12 NPT (SOLID PLUG)**	**1EA**
A17120-197-GB		**D.E.GASKET (F16K-F18K)**	**1EA**
A14423G-128-SM		**CPSCR, HEX .62NC X1.50 GR5**	**4EA**
A14430H-363-SK		**WASHER, LOCK 5/8"**	**4EA**
A23594-342-SK		**COVER, SAE 1 ENGINE BRACKET**	**1EA**
A14415A-128-SM		**CPSCR, HEX .25NC X .50 GR5**	**4EA**

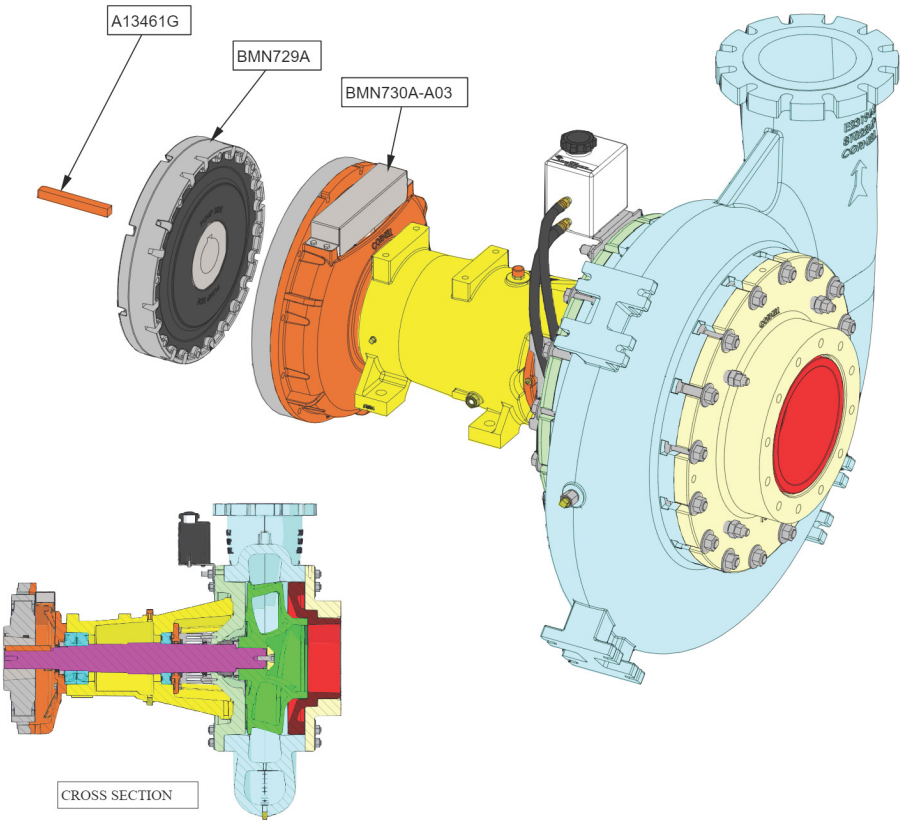

PART NUMBER	DESCRIPTION	QTY
BMN730A-A03	**81022MP-CAC-EM 12CBK-1 CYC R-D 22"IMP**	**1EA**
BMN729A	**RDD, 14" AC-T7 HI TORQUE W/ 3" TAPER LOCK**	**1EA**
A13461G-28-KS	**KEY .75 X 6.50**	**1EA**

81022MP PUMP

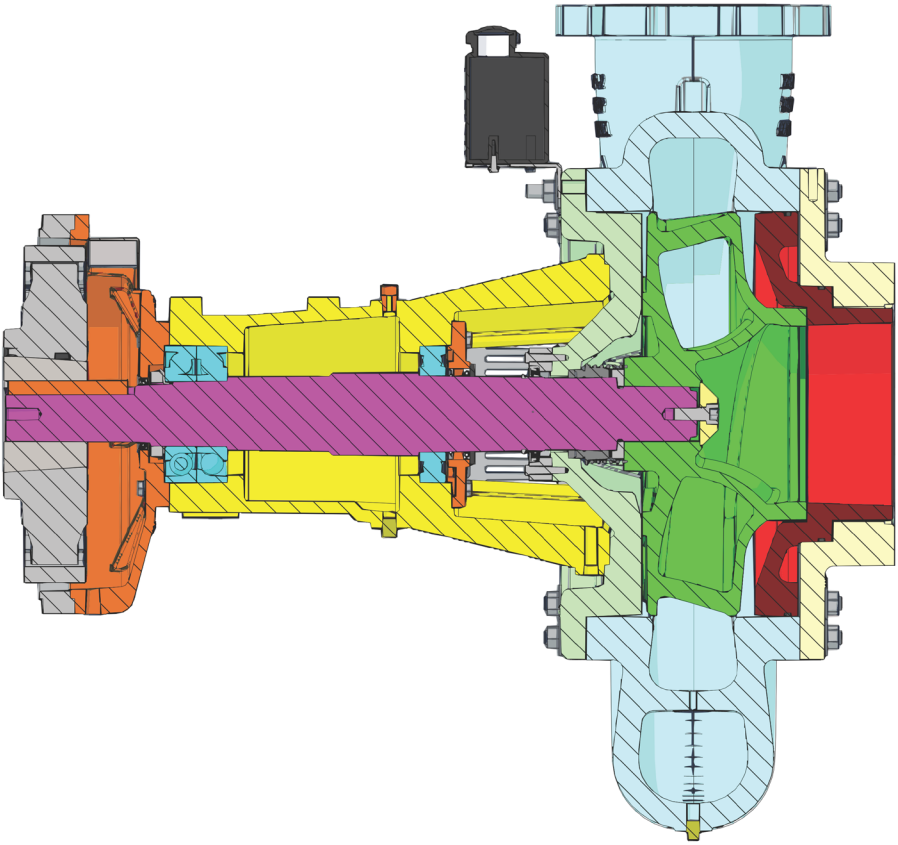

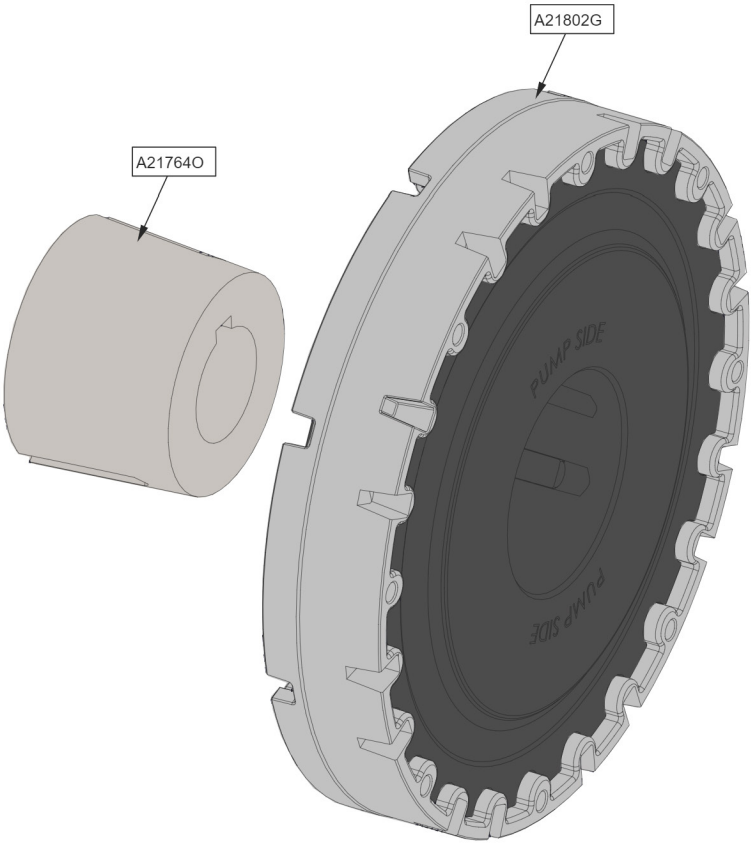

PART NUMBER	DESCRIPTION	QTY
A21802G-335	**RDD 14" ARCUS AC- T7.SN.F2.14.4545**	**1EA**
A217640O-251-SK	**DODGE 4545 3.00 TAPER LOCK BUSHING**	**1EA**

81022MP PUMP

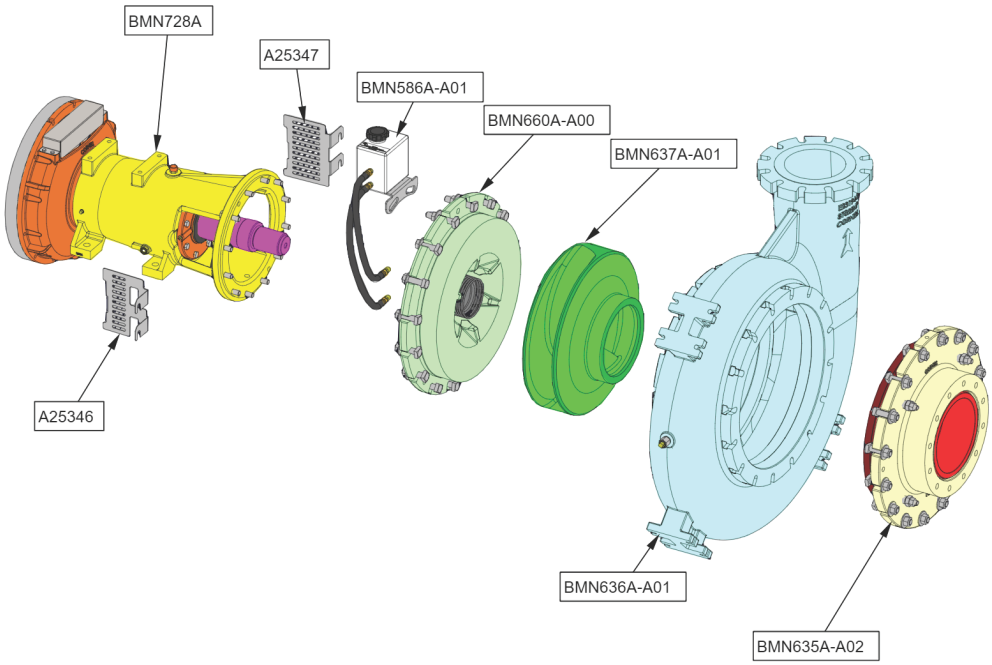

PART NUMBER	DESCRIPTION	QTY
BMN635A-A02	**SUCTION COVER, 81022MP**	**1EA**
BMN636A-A01	**VOLUTE, 81022MP**	**1EA**
BMN637A-A01	**IMPELLER, 81022MP**	**1EA**
BMN660A-A00	**BACKPLATE, 81022MP F12 CYCLO R-D**	**1EA**
BMN728A	**FRAME EM12DBK-1, B23550 SH. THD**	**1EA**
A25347-220-SD	**GUARD, F12 FRAME NON-HOSE SIDE**	**1EA**
A25346-220-SD	**GUARD, F12 FRAME HOSE SIDE**	**1EA**
BMN586A-A01	**RESV/FTGS RUN-DRY (PLASTIC)**	**1EA**

81022MP

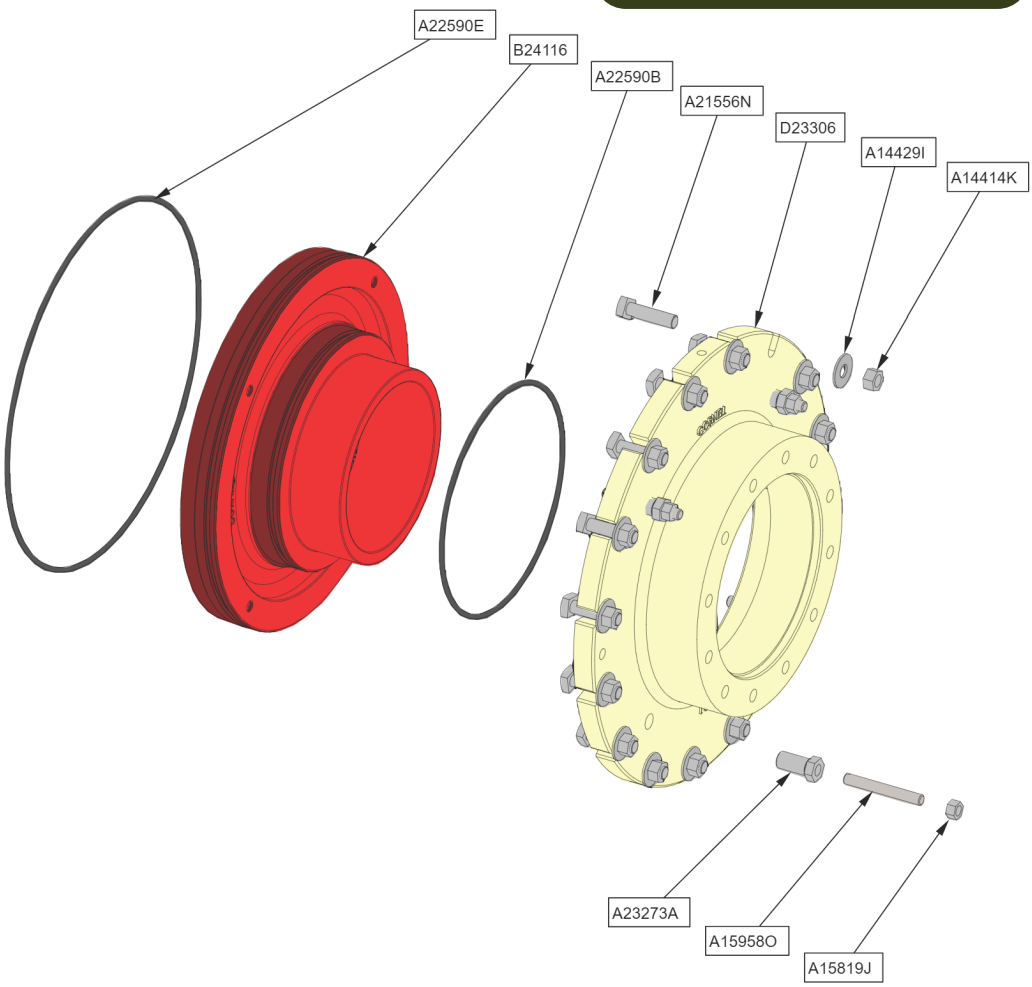

PART NUMBER	PUCK PART NUMBER	DESCRIPTION	QTY
D23306-1-CV	**15-00406-11**	**SUCTION COVER, 81022MP (MACHINE)**	**1EA**
B24116-41-CAC	**15-00295-11**	**WEAR PLATE, 81022MP**	**1EA**
A22590E-59-EV	**15-00356-11**	**O-RING, 20.96 X 21.50 X .28 (2-470)**	**1EA**
A22590B-59-EV	**15-00357-11**	**O-RING, 13.48 X 14.02 X .28 (2-456)**	**1EA**
A2327A-251-SK	**15-00284-11**	**CPSCR. ADJUST. BUSHING 1-12NF**	**4EA**
A15958O-433-SM	**15-00403-11**	**STUD, .62-11NC X 5.00 ALL THREAD**	**4EA**
A21556N-128-SM		**.75NC X 3.00 SQR HEAD, GR5**	**16EA**
A15819J-362-SM		**NUT, .62 NEX**	**4EA**
A114414K-362-SK		**NUT, .75 NC HEAVY HEX STEEL**	**16EA**
A14429I-193-FS		**WASHER, FLAT .75 (GRADE 8)**	**16EA**

81022MP PUMP

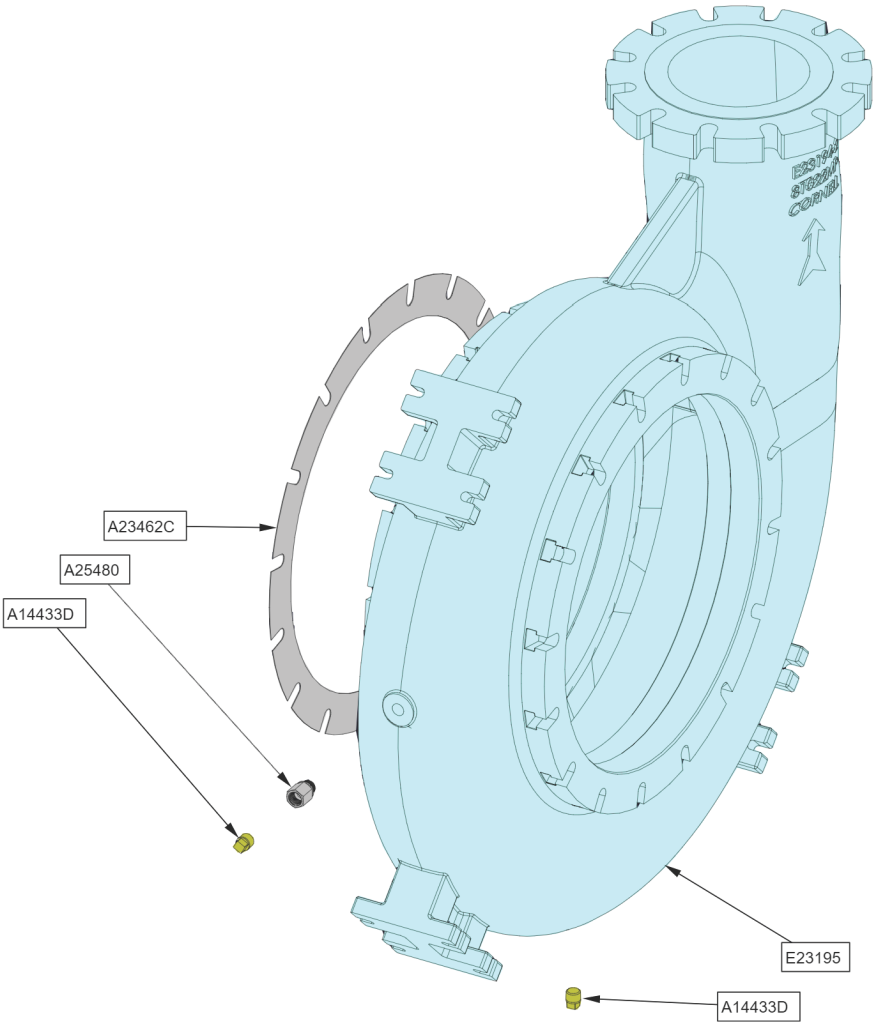

PART NUMBER	PUCK PART NUMBER	DESCRIPTION	QTY
E23195-2-CAC	**15-00459-11**	**VOLUTE, 81022MP (MACHINE)**	**1EA**
A23462C-197-GA	**15-00435-11**	**GASKET, 22.00 X 26.75 X .03**	**1EA**
A25480-251-SK		**PIPE BUSHING, 1/2" NPT FEMALE X 1/2" BSPP MALE**	**2EA**
A14433D-56-XS		**PIPE PLUG .50 NPT (SOLID PLUG)**	**2EA**

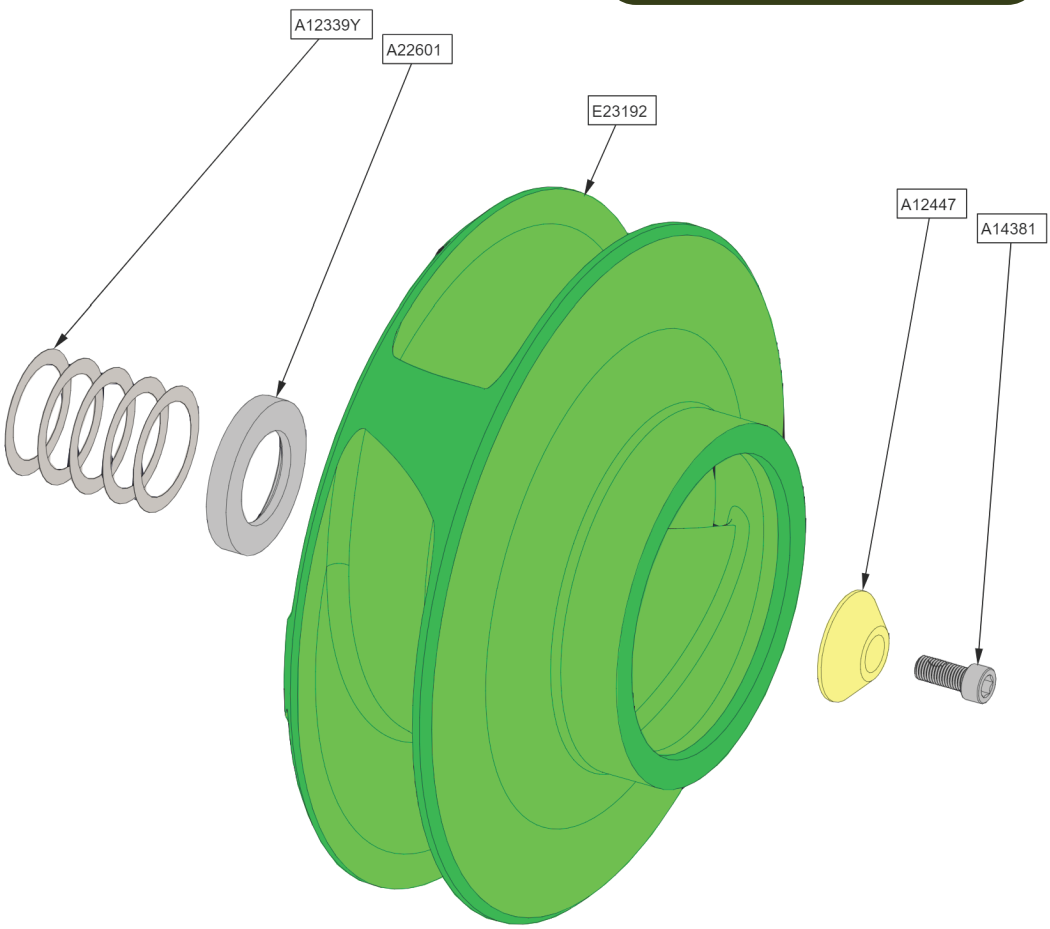

PART NUMBER	PUCK PART NUMBER	DESCRIPTION	QTY
E23192-3-CAC-R	**15-00311-11**	**IMPELLER, 81022MP 22"DIA (MACHINE)**	**1EA**
A12447-13-ST	**15-00500-11**	**IMPELLER WASHER- .78 X 3.50 X 1.00**	**1EA**
A14381-12-SD	**15-00501-11**	**LOCKSCREW .75NC X 1.75 SOC 18-8**	**1EA**
A22601-95-FHA		**THRUST WASHER 3.0 ID X 4.875 OD X 4.875 OD X .75" THK**	**1EA**
A12339Y-107-SDA	**15-00535-11**	**IMPELLER SHIM .015" THICK (AS REQ'D)**	**3EA**
A12339Y-107-SDA-010	**15-00536-11**	**IMPELLER SHIM .010" THICK**	**1EA**
A12339Y-107-SDA-005	**15-00537-11**	**IMPELLER SHIM .005" THICK**	**1EA**
	15-00312-11	**FOR 20" IMPELLER**	

81022MP PUMP

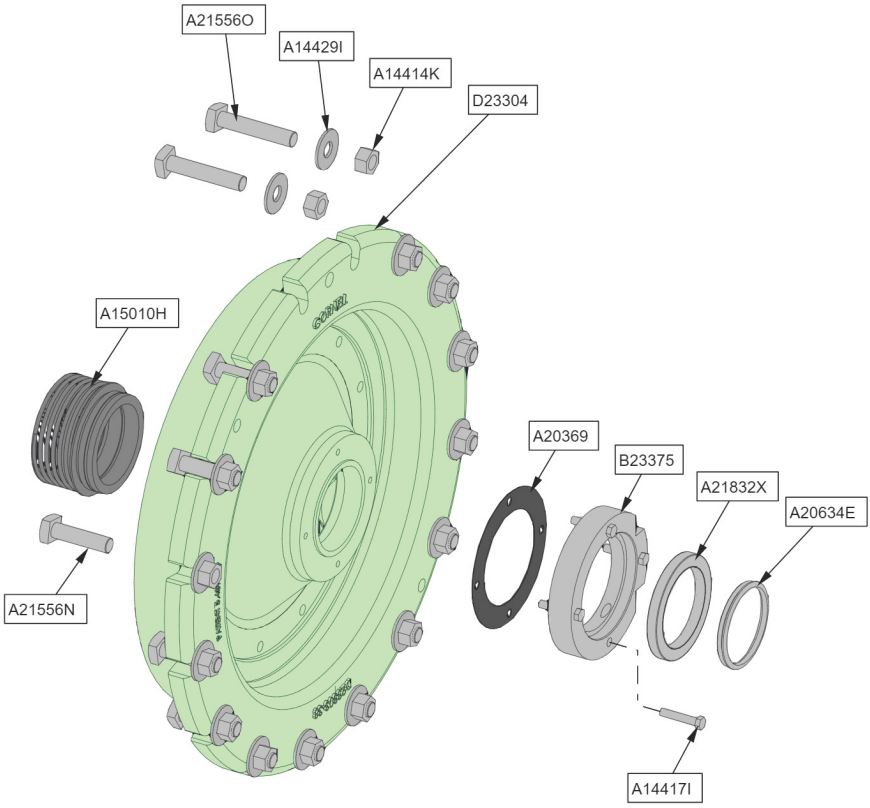

PART NUMBER	PUCK PART NUMBER	DESCRIPTION	QTY
D23304-38-CAC	**15-00580-11**	**BACKPLATE, 81022MP (MACHINE)**	**1EA**
A15010H-40	**15-00298-11**	**SEAL 4002S RP**	**1EA**
A21556N-128-SM		**.75NC X 3.00 SQR HEAD, GR5**	**14EA**
A21556O-128-SM		**.75NC X 4.00 SQR HEAD, GR5**	**2EA**
A14414K-362-SK		**NUT, .75 NC HEAVY HEX STEEL**	**16EA**
A14429I-193-FS		**WASHER, FLAT .75 (GRADE 8)**	**16EA**
A21832X-18	**15-0015-11**	**LIP SEAL TRI SEAL 4.00 X 5.25 X .53**	**1EA**
A20634E-16		**V-RING, 401004**	**1EA**
B23375-5A-CI		**SEAL GLAND 4.0" RUN-DRY (MACHINE)**	**1EA**
A20369-197-GB	**15-00152-11**	**GASKET 7.0 X 4.81 X .03 THK**	**1EA**
A14417I-128-SM		**CPSCR, HEX .38NC X 2.00 GR5**	**4EA**

81022MP

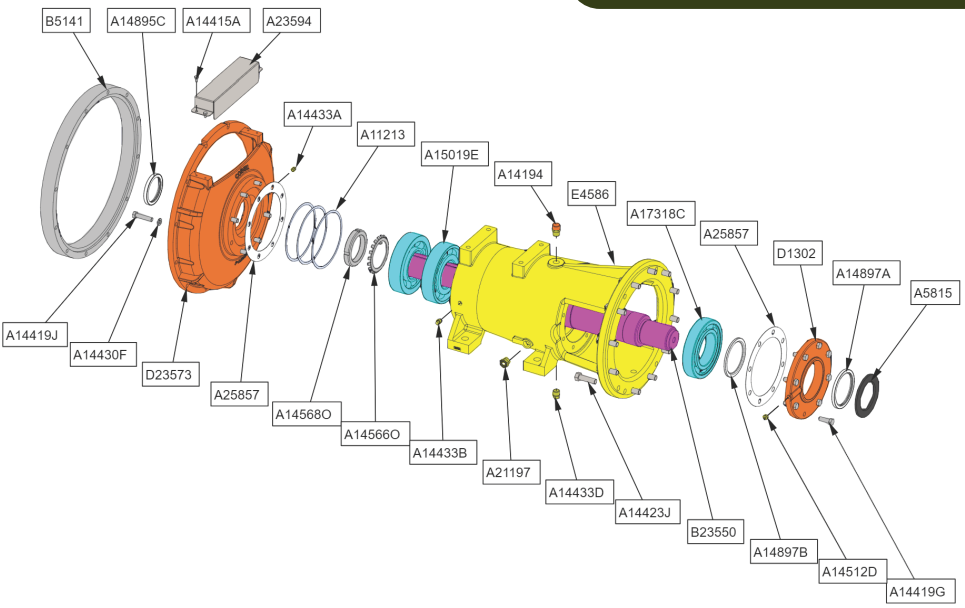

PART NUMBER	PUCK PART NUMBER	DESCRIPTION	QTY
E4586-8-CI		FRAME 12F8A	1EA
A14423J-128-SM		CPSCR, HEX .62NC X 2.25 GR5	12EA
B23550-14-FHA	15-00423-11	SHAFT EM12 8NHTH THREADED	1EA
A5815-16-EB		DEFLECTOR	1EA
D1302-22-CI	15-00542-11	BEARING COVER 12F-22	1EA
A2587-197-GB	15-00533-11	GASKET EM12	2EA
A14419G-128-SM		CPSCR, HEX .50NC X 1.50 GR5	8EA
A14897A-18	15-00418-11	LIP SEAL 40050044EBS	1EA
A14897B-18	15-00419-11	LIP SEAL CR 39961	1EA
A17318C-20	15-0042-11	BEARING 6221-C3	1EA
A14512D-154-SK		GREASE FTG .25"NPT STRAIGHT	1EA
A14194-262-SK		BREATHER .50 NPT	1EA
D23573-4-CI	15-00534-11	ENGINE BRACKET, SAE 1, F12 (MACHINE)	1EA
A14419J-128-SM		CPSCR, HEX .50NC X 2.25 GR5	8EA
A14430F-363-SK		WASHER, LOCK .50	8EA
A14895C-18	15-00420-11	LIP SEAL CR 31148	1EA
A14568O-129-SK	15-00539-11	LOCK NUT AN-18	1EA
A14556O-363-SK	15-00538-11	LOCK WASHER W-18	1EA
A15019E-20	15-00422-11	BALL BEARING 7318 BG	2EA
A21197-188-SK		VIEW GAUGE 1/2"NPT LEXAN	1EA
A14433B-56-XS		PIPE PLUG .25 NPT (SOLID PLUG)	1EA
A14433D-56-XS		PIPE PLUG .50 NPT (SOLID PLUG)	1EA

81022MP PUMP

PART NUMBERS CONT.

PART NUMBER	PUCK PART NUMBER	DESCRIPTION	QTY
A14433A-56-XS		**PIPE PLUG .12 NPT (SOLID PLUG)**	**1EA**
A11213-107-AS	**15-00549-11**	**SHIM .015 THICK (AS REQ'D)**	**3EA**
B5141-51-SK	**15-00532-11**	**SPACER RING, SAE 1**	**1EA**
A23594-342-SK		**COVER, SAE 1 ENGINE BRACKET**	**1EA**
A14415A-128-SM		**CPSCR, HEX .25NC X .50 GR5**	**4EA**

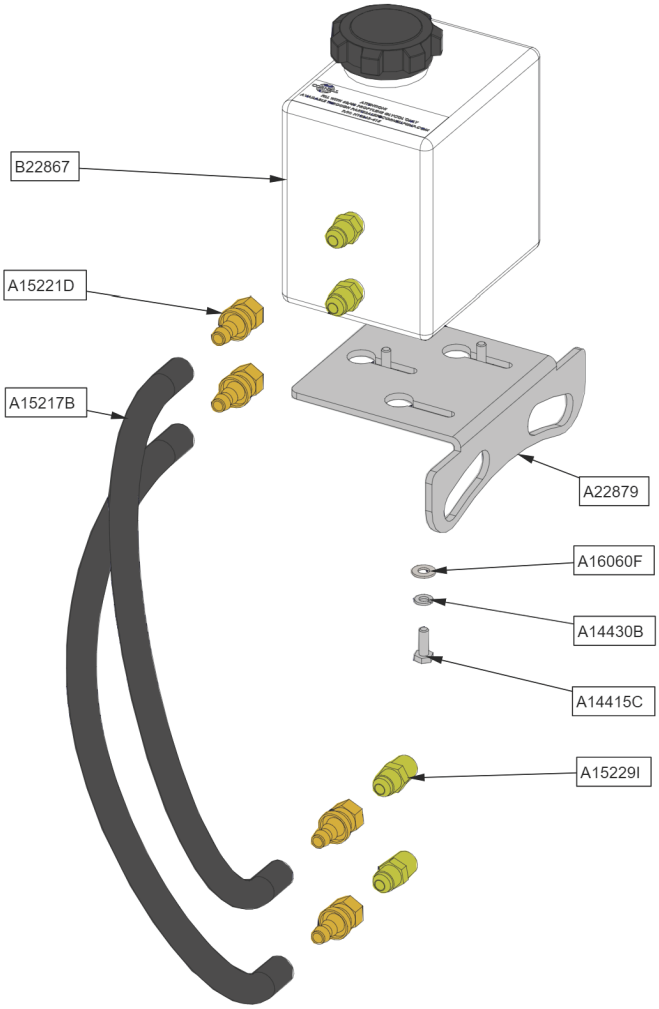

PART NUMBER	PUCK PART NUMBER	DESCRIPTION	QTY
B22867-157	**15-00264-11**	**RESERVOIR W/CAP, RUN-DRY (PLASTIC)**	**1EA**
A22879-384-SK	**15-00431-11**	**BRACKET, RUN-DRY RESV, GRAY, .75 SCREW**	**1EA**
A16060F-193-SK		**WASHER, SAE .25**	**3EA**
A14430B-363-SK		**WASHER, LOCK .25**	**3EA**
A14415C-128-SM		**CPSCR, HEX .25NC X .75 GR5**	**3EA**
A15229I-243-BD		**TUBE FTG - MALE 48 X 6 X 6 FLARED**	**2EA**
A15221D-422-BD		**FITTING HOSE -45D FLARE SWIVEL**	**4EA**
A15217B-421-EB		**HOSE .38 ID**	**48IN**

PROUDLY

AMERICAN MADE

In the land of the free Puck is built to lead. Our products are proudly hand-crafted in the heart of this great country—in the very town our company was founded over 45 years ago. We utilize only the best materials from the ground up to keep your operation running strong year after year.

LOCATIONS

LOCATIONS

MANNING
1110 100th St
Manning, IA
712.655.9200

DUBUQUE
10166 Hartbecke Rd
Suite B · Farley, IA
712.655.9203

WORTHING
47086 Pioneer St
Worthing, SD
712.655.9202

AURORA
3626 State Route 90
Aurora, NY
712.655.9206

ANGIER
BullDog Hose Company
141 Junny Rd
Angier, NC
712.655.9201

DOTHAN
U.S. Coupling
1134 North Range St
Dothan, AL
888.447.6441

INTERNATIONAL
Vukovarska 229 C
31000 Osijek · Croatia
+ 385 31 659 229

PUCK™

Built to Lead.