2023 Edition 3

PUCK™
Built to Lead.

PARTS and SUPPLIES BOOK

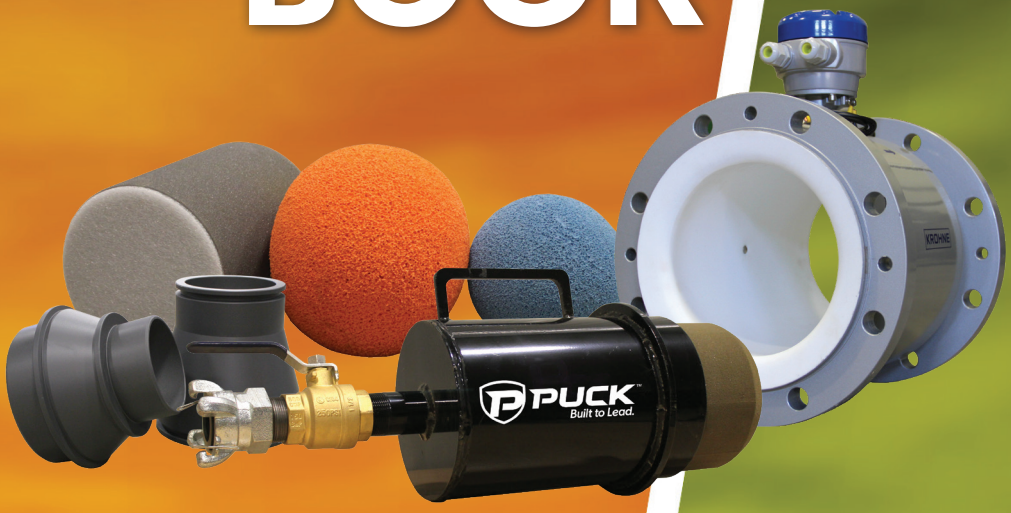

www.Puck.com

ABOUT US

Puck Family of Brands

Puck designs and manufactures industry-leading manure and liquid transfer equipment.
We are innovators who work hard to make our liquid transfer equipment better for one simple reason; we don't just build the equipment, we use it.

LightSpeed technology comes standard on all Puck pumps, so all your pumps will be protected and monitored by the watchful eyes of this powerful platform. Regulate pressures and add another layer of safety without adding more people to your operation, through LightSpeed's advanced protection technology.

Designed for high performance and durability, BullDog Hose Company's American-made agricultural hoses deliver a steady and reliable flow. From crop irrigation to liquid manure application operations, BullDog hoses are developed to withstand harsh conditions with performance you can depend on.

U.S. Coupling & Accessories, Inc. strives to develop engineering-based solutions for customer needs, such as accessories for umbilical manure slurry applications. We lead the industry in products for large diameter supply hose and drag hose fittings.

TABLE OF CONTENTS

High Pressure Hose Fittings	2
Steel Weldments	7
Hose Accessories & Tie Downs	9
Hitches	11
Trailer Lights	13
Trailer Wiring	15
LightSpeed & Guardian	17
Boat Controls	19
Hydraulics	21
Hydrostat	27
Applicators	29
Measurement	37
Cornell Delivery Pumps	41
Cornell Cutter Pumps	51
Cornell Submersible Pumps	61
Doda	63
Locations	67
Puck Pump School	69

6" COUPLERS

Coupler Sets includes both coupler ends with collars, hardware, rubber gaskets, sleeve and clamp.

DOUBLE BOLT COUPLER SET

SIZE	PART NUMBER
6"	55-00003-11
5 1/2"	55-00086-11
5"	55-00085-11

6" MENDERS

Mender Set includes: mender sleeve, collars and hardware to join hose without coupling.

DOUBLE BOLT MENDER SET

SIZE	PART NUMBER
6"	55-00091-11
5 1/2"	55-00111-11
5"	55-00090-11

6" COMPONENTS

Sleeves, clamp & o-rings are 5, 5 1/2", & 6" compatible.

SLEEVE - ANODIZED ALUMINUM

SIZE	PART NUMBER
6"	55-00052-11

RUBBER GASKET O-RINGS

SIZE	PART NUMBER
6"	55-00057-11

CLAMP

SIZE	PART NUMBER
6" HD	55-00138-11

SLEEVE - PVC

SIZE	PART NUMBER
6"	55-00097-11

T-HANDLE

SIZE	PART NUMBER
5/16" HEX WRENCH	55-00007-11

8" COUPLERS

Coupler Sets includes both coupler ends with collars, hardware, rubber gaskets, sleeve and clamp.

DOUBLE BOLT COUPLER SET

SIZE	PART NUMBER
8"	55-00016-11
7 1/4"	55-00088-11
7"	55-00014-11

8" MENDERS

Mender Set includes: mender sleeve, collars and hardware to join hose without coupling.

DOUBLE BOLT MENDER SET

SIZE	PART NUMBER
8"	55-00011-11
7 1/4"	55-00089-11
7"	55-00010-11

7 TO 6" DOUBLE BOLT MENDER SET

SIZE	PART NUMBER
7 to 6"	55-00079-11

8" COMPONENTS

Sleeves, clamp & O-rings are 7, 7 1/4, & 8" compatible.

SLEEVE - ANODIZED ALUMINUM

SIZE	PART NUMBER
8"	55-00051-11

CLAMP

SIZE	PART NUMBER
8" HD	55-00139-11

RUBBER GASKET O-RINGS

SIZE	PART NUMBER
8"	55-00050-11

T-HANDLE

SIZE	PART NUMBER
5/16" HEX WRENCH	55-00007-11

10" COUPLERS

Coupler Sets includes both coupler ends with collars, hardware, rubber gaskets, sleeve and clamp.

DOUBLE BOLT COUPLER SET

SIZE	PART NUMBER
10"	**55-00023-11**

10" MENDERS

Mender Set includes: mender sleeve, collars and hardware to join hose without coupling.

DOUBLE BOLT MENDER SET

SIZE	PART NUMBER
10"	**55-00024-11**

10" COMPONENTS

Sleeves, clamp & O-rings are 7, 7 1/4, & 8" compatible.

SLEEVE - ANODIZED ALUMINUM

SIZE	PART NUMBER
10"	**55-00001-11**

RUBBER GASKET O-RINGS

SIZE	PART NUMBER
10"	**55-00001-11**

CLAMP

SIZE	PART NUMBER
10" HD	**55-00140-11**

T-HANDLE

SIZE	PART NUMBER
3/8" HEX WRENCH	**55-00113-11**

DOUBLE MALE REDUCING ADAPTERS

10" TO 8" - STEEL REDUCER

10" side uses a clamp to join to a 10" coupler end. 8" side fits 6 1/2", 7", 7 1/4", 8" coupler ends, using a clamp to join.

PART NUMBER

55-00123-11

8" TO 6" - ALUMINUM REDUCER

8" side uses a clamp to join to a 7", 7 1/4", 8" coupler end. 6" side fits 5", 5 1/2" or 6" coupler ends, using a clamp to join.

PART NUMBER

55-00004-11

DOUBLE FEMALE REDUCING ADAPTERS

10" TO 8" - STEEL REDUCER

10" side uses a sleeve and clamp to join to a 10" coupler end. 8" side fits 7", 7 1/4", 8" coupler ends, using a sleeve and clamp to join.

PART NUMBER

56-00072-11

8" TO 6" - ALUMINUM REDUCER

8" side uses a sleeve and clamp to join to a 7", 7 1/4", 8" coupler end. 6" side fits 5", 5 1/2" or 6" coupler ends, using a sleeve and clamp to join.

PART NUMBER

55-00022-11

MALE TO FEMALE REDUCING ADAPTERS

10" MALE TO 8" FEMALE - STEEL

10" side uses a clamp to join to a 10" coupler end. 8" side fits 7", 7 1/4", 8" coupler ends, using a sleeve and clamp to join.

PART NUMBER

55-00119-11

WELD-ON COUPLER ENDS

MALE ENDS

Couple directly to compatible ends, using a clamp to connect.

SIZE	PART NUMBER
10"	**67-00425-11**
8" - for 8 1/4", 7 1/4", 7" ends	**67-00424-11**
6" - for 6", 5 1/2", 5" ends	**67-00415-11**
6" x 5" - Welds directly to 6" tubing	**26-00072-11**

FEMALE ENDS

Couple directly to compatible ends, requiring a sleeve and clamp to connect.

SINGLE GASKET

Single, rubber gasket O-ring

SIZE	PART NUMBER
10"	**56-00002-11**
8" - for 8", 7 1/4", 7" ends	**26-00039-11**
6" - for 6", 5 1/2", 5" ends	**26-00038-11**

DOUBLE GASKET

Extra seal with double rubber gasket O-rings

SIZE	PART NUMBER
10"	**55-00148-11**
8" - for 8", 7 1/4", 7" ends	**26-00018-11**
6" - for 6", 5 1/2", 5" ends	**26-00019-11**

STEEL WELDMENTS

BUTT WELD FLANGE - 150 LBS

SIZE	PART NUMBER
10" - 12 BOLT	27-00016-11
8" - 8 BOLT	27-00019-11
4" - 8 BOLT	27-00028-11

BLIND FLANGE - 150 LBS

SIZE	PART NUMBER
8" - 8 BOLT	27-00003-11
6" - 8 BOLT	27-00002-11

SLIP FLANGE - 150 LBS

SIZE	PART NUMBER
10" - 12 BOLT	27-00017-11
8" - 12 BOLT	27-00001-11
8" - 8 BOLT	27-00020-11
6" - 12 BOLT	27-00030-11
6" - 8 BOLT	27-00034-11
5" - 8 BOLT	27-00026-11
4" - 8 BOLT	27-00029-11

FLANGE GASKET

Full faced, 1/8" thick, Neoprene

SIZE	PART NUMBER
10"	27-00015-11
8"	27-00018-11
6"	27-00021-11
5"	27-00035-11
4"	27-00027-11

WELD RING

SIZE	PART NUMBER
10"	21-00741-11
8"	22-00059-11
6"	21-00076-11

ELBOW - 45 DEGREE

SIZE	PART NUMBER
10"	26-00007-11
8"	26-00068-11
6"	26-00059-11
5"	26-00061-11
4"	26-00065-11

CONCENTRIC

SIZE	PART NUMBER
10 TO 8"	26-00037-11
10 TO 6"	26-00048-11
8 TO 6"	26-00049-11
8 TO 5"	26-00050-11
4 TO 3"	26-00040-11

ELBOW LONG - 90 DEGREE

SIZE	PART NUMBER
10"	26-00017-11
8"	26-00067-11
6"	26-00057-11
5"	26-00060-11
4"	26-00063-11

ELBOW SHORT - 90 DEGREE

SIZE	PART NUMBER
10"	26-00011-11
8"	26-00020-11
6"	26-00009-11

TEE

SIZE	PART NUMBER
10"	26-00055-11
8"	26-00056-11
8" WITH 6" BRANCH	26-00015-11
8" WITH 4" BRANCH	26-00014-11
6"	26-00058-11
6" WITH 4" BRANCH	26-00035-11
5"	26-00062-11
4"	26-00064-11

HOSE ACCESSORIES

PIG - KICKBALL

SIZE	PART NUMBER
12"	59-00029-11
10"	59-00015-11
8"	59-00015-11
6"	59-00003-11

PIG - FOAM BULLET

SIZE	PART NUMBER
10"	59-00018-11
8"	59-00004-11

PORTABLE PIG LAUNCHER

SIZE	PART NUMBER
8"	18-00003-11
6"	18-00004-11

HOSE PINCHER

SIZE	PART NUMBER
10"	55-00120-11
8"	55-00037-11

6" HOSE PINCHER

PART NUMBER
55-00048-11

HANDLED HOSE PULLER

PART NUMBER
59-00005-11

TIE DOWNS

1"x 15' RATCHET STRAP

PART NUMBER
95-00025-11

1"x 10' PULL LOCK STRAP

PART NUMBER
95-00023-11

2"x 10' RATCHET STRAP

SIZE	PART NUMBER
10'	95-00021-11
27'	95-00027-11

3/8" RATCHET CHAIN BINDER

PART NUMBER
95-00009-11

LEVER CHAIN BINDERS

SIZE	PART NUMBER
1/2"	95-00039-11
3/8"	95-00042-11

SAFETY CHAIN WITH LATCH HOOK

36" length. DOT approved

SIZE	PART NUMBER
3/8"	44-00004-11
7/8"	44-00015-11

3/8" GRADE 70 HOOK - WITH PIN

PART NUMBER
44-00011-11

3/8" CHAIN HOOK

Includes pin & cotter clip

PART NUMBER
44-00047-11

HITCHES

LOADED RECEIVER HITCH

Includes a 2 5/16" Ball with 15,000 lbs capacity

PART NUMBER

44-00019-11

LOADED DUAL HITCH RECEIVER

Includes 2 5/16" Ball with 12,000 lbs capacity

PART NUMBER

44-00003-11

RECEIVER HITCH

7/8" hole, 7,500 lbs max trailer weight, 700 lbs max tongue weight

PART NUMBER

44-00020-11

2 5/16" TRAILER BALL

1" diameter shank, 30,000 lbs rating

PART NUMBER

44-00017-11

2"x 12" HITCH RECEIVER TUBE

2" x 2"x 12" in raw finish

PART NUMBER

44-00001-11

2 1/2" TO 2" HITCH REDUCER BUSHING

PART NUMBER

44-00022-11

5/8" HITCH PIN WITH CLIP

PART NUMBER

44-00046-11

PIN WITH SPRING LOCK - 5/8"x 4"

PART NUMBER

74-00025-11

TRAILER JACK 15”
Pipe mount, 8,000 lift

PART NUMBER

67-00098C6-12

TRAILER JACK STAND MOUNT BLOCK
To use with 15” Trailer Jack

PART NUMBER

45-00010-11

7/8”x 6” DOUBLE LOCK HITCH PIN

PART NUMBER

44-00009-11

3 HOLE MOUNT CLEVIS HITCH

PART NUMBER

44-00005-11

4 BOLT MOUNT PINTLE HITCH
90,000 lbs rating

PART NUMBER

44-00016-11

3” PINTLE TOW RING
With 2” threaded swivel shaft 50,000lbs rating

PART NUMBER

44-00002-11

3” BOLT ON PINTLE TOW RING

PART NUMBER

44-00006-11

PINTLE HOOK DRAWBAR ASSEMBLY
Bolt on piece for swivel tow ring to attach to Puck hitch plates

PART NUMBER

67-00851-11

LED MARKER LIGHTS

3/4" MARKER LIGHTS

COLOR	PART NUMBER
AMBER	**83-00017-11**
RED	**83-00018-11**

2" ROUND MARKER LIGHTS

COLOR	PART NUMBER
RED	**83-00003-11**
AMBER	**83-00002-11**
GROMMET	**83-00111-11**
2 PIN PIGTAIL	**83-00009-11**

4" ROUND MARKER LIGHTS

COLOR	PART NUMBER
RED	**83-00005-11**
CLEAR	**83-00012-11**
GROMMET	**83-00112-11**
3 PIN PIGTAIL	**83-00010-11**

6" OVAL MARKER LIGHTS

COLOR	PART NUMBER
RED	**83-00021-11**
AMBER	**83-00022-11**
GROMMET	**83-00020-11**
3 PIN PIGTAIL	**83-00019-11**

LED MARKER LIGHTS

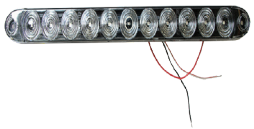

H&H TRAILERS - STOP/TURN/TAIL LIGHT BAR

STYLE	PART NUMBER
3 - WIRE	**83-00113-11**

H&H TRAILERS - ID LIGHT BAR

STYLE	PART NUMBER
2 - WIRE	**83-00114-11**

LED RADIUS GROTE LIGHT

EQUIPMENT	PART NUMBER
TURN TABLE REEL	**83-00024-11**

LED LIGHT BAR

SIZE	PART NUMBER
30"	**83-00011-11**
10"	**83-00030-11**

LED OVAL GROTE WORK LIGHT

LED, 6" oval, 2500 lumens, 36 watts

PART NUMBER
83-00001-11

TRAILER WIRING

7 FLAT - TRAILER WIRING HARNESS

ITEM	PART NUMBER
MALE	**87-00004-11**
FEMALE	**87-00005-11**

7 ROUND - TRAILER WIRING HARNESS

ITEM	PART NUMBER
MALE	**87-00036-11**
FEMALE	**87-00037-11**

7 POST JUNCTION BOX

PART NUMBER
85-00001-11

4 POST WIRING RELAYS

ITEM	PART NUMBER
START/STOP RELAY with PIGTAIL	**84-00020-11**
REVERSING RELAY	**84-00015-11**

TRAILER BREAKAWAY KIT & COMPONENTS

ITEM	PART NUMBER
FULL BREAKAWAY KIT	**89-00002-11**
BATTERY	**89-00007-11**
TRAILER SWITCH	**89-00008-11**

ELECTRONIC REPLACEMENT PARTS

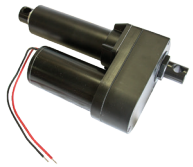

ELECTRIC ACTUATOR 12 VDC

SIZE	PART NUMBER
4"	**84-00010-11**
6"	**84-00011-11**
8"	**84-00012-11**

MASTER DISCONNECT SWITCH

PART NUMBER
84-00017-11

MASTER DISCONNECT SWITCH (OLD STYLE)

PART NUMBER
84-00009-11

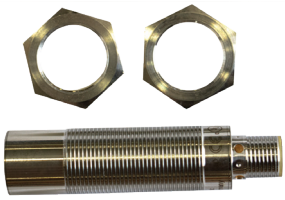

PROXIMITY SENSORS

ITEM	PART NUMBER
IGT249	**86-00027-11**

PRESSURE SENSORS

ITEM	PART NUMBER
WELD ADAPTER	**84-00034-11**
S-11 SENSOR 0-600 PSI for GAUGE PANEL	**84-00037-11**
MH-2 SENSOR 0-8000 PSI	**84-00027-11**
DIN	**84-00058-11**
M12	**84-00072-11**
WIKA MH-2 SENSOR 0-1500 PSI CHARGE PRESSURE	**84-00026-11**

LIGHTSPEED and GUARDIAN

BOOM REMOTE

ITEM	PART NUMBER
WIRELESS REMOTE RADIO PACKAGE (RP11788R0)	87-00054-11

AGITATOR GAUGE PANEL OUTPUT HARNESS

PART NUMBER
86-00072-11

DIN CONNECTORS - SERIES 210-2 10A 250V

PART NUMBER
87-00001-11

LIGHTSPEED - TRACTOR CAB

ITEM	PART NUMBER
MODEM KIT - includes modem, antenna, ethernet cables and harness	86-00045-11
MODEM - VERIZON 4G LTE	86-00007-11
MODEM ANTENNA - 4G LTE CELL/GPS/ WIFI ANTENNA	89-00003-11

POWER ACCESSORIES

ITEM	PART NUMBER
12V to 110V POWER INVERTER	86-00089-11
LIND VOLTAGE BOOSTER	86-00001-11

CAT ACCESIORIES

ITEM	PART NUMBER
20A 24V MICRO RELAY RESISTOR	84-00052-11
HMI to NODE HARNESS for CAT BOOSTER (HA133620RO-0)	86-00100-11
NODE BATTERY	89-00011-11

VOYAGER - BOAT REMOTE

BOAT REMOTE - BLUE SCANRECO

ITEM	PART NUMBER
MINI PACKAGE	**86-00014-11**
RECEIVER	**86-00097-11**
BATTERY	**89-00012-11**
CHARGER FOR BATTERY	**89-00013-11**

BOAT REMOTE - GRAY SCANRECO

ITEM	PART NUMBER
BATTERY	**89-00014-11**
CHARGER	**89-00015-11**
WALL CHARGER	**89-00016-11**

GPS AUTOSTEER ACCESSORIES FOR BOATS

ITEM	PART NUMBER
GPS AUTOSTEER INPUT HARNESS	**86-00073-11**
STROBE LIGHT for BOAT	**86-00095-11**
BACK UP HORN WITH CONNECTOR	**86-00017-11**

YELLOW BOAT REMOTE

RADIO PACKAGES: YELLOW OMNEX

ITEM	PART NUMBER
RECEIVER	**84-00005-11**
YELLOW BOAT REMOTE with DECALS	**84-00018-11**
BATTERY CHARGER	**89-00004-11**
DECAL LABEL SET	**86-00051-11**

WARN WINCH REMOTES - BOAT TRAILER

ITEM	PART NUMBER
WIRELESS REMOTE with HARNESS and CONTROLLER	**84-00001-11**
CORDED REMOTE	**84-00003-11**

HYDRAULIC PUMPS and MOTORS

HYDRAULIC MOTORS

ITEM	PART NUMBER
MOTOR for FF BOOM SWIVEL (DANFOSS)	**35-00020-11**
MOTOR for BOAT VACUUM SYSTEM (CROSS)	**35-00005-11**
MOTOR for HOSE CART 1540	**35-00010-11**
MOTOR for TOOLBAR MANIFOLD - MECHANICAL	**35-00016-11**
DYNAMIC MECHANICAL DIST	**35-00073-11**
6K EXCEL	**35-00094-11**

HYDRAULIC PUMPS

ITEM	PART NUMBER
BI-DIRECTIONAL PUMP (PARKER)	**34-00007-11**

OVERHUNG LOAD ADAPTER for MECHANICAL DISTRIBUTOR MOTOR

SIZE	PART NUMBER
1" OUTPUT	**35-00012-11**
1 1/2" OUTPUT	**35-00051-11**

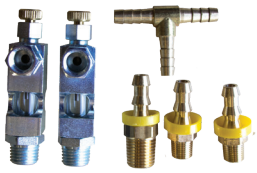

VACUUM PUMPS

ITEM	PART NUMBER
H2F MASPORT VACUUM PUMP	**96-00006-11**
OILER KIT	**39-00006-11**

TANK LEVEL ADAPTER

PART NUMBER
86-00031-11

40 MICRON BREATHER

SIZE	PART NUMBER
1/2"	**39-00022-11**

HYDRAULIC OIL RESERVOIRS

HYDRAULIC OIL TOWER PARTS

	ITEM	PART NUMBER
	SIGHT GLASS - 6 5/8"	**39-00010-11**
	HYDRAULIC OIL FILTER	**39-00003-11**
	HYDRAULIC OIL FILTER BASE	**39-00002-11**
	1 1/2" x 1" SUCTION SCREEN	**39-00007-11**
	3/4" MAGNETIC PIPE PLUG	**39-00005-11**

HYDRAULIC OIL RESERVOIRS

ITEM	PART NUMBER
30 GALLON	**93-00010-11**
15 GALLON - CUSTOM	**93-00081-11**
1 GALLON - PLASTIC	**93-00014-11**

1/2" NPT SIGHT GLASS

SIZE	PART NUMBER
1/2"	**39-00004-11**
6"	**39-00012-11**
6" 90°	**39-00013-11**

3/8" NPT SIGHT GLASS

SIZE	PART NUMBER
4" 90°	**39-00015-11**

HYDRAULIC VALVES

UNIVERSAL HYDRAULIC MANIFOLD

SIZE	PART NUMBER
6 SECTION	**36-00048-11**
10 SECTION	**36-00044-11**

HYDRAULIC VALVE COMPONENTS

ITEM	PART NUMBER
SOLENOID WORK SECTION	**36-00012-11**
REVERSIBLE VALVE: MOTORS & LOCKDOWN VALVES	**36-00017-11**
REVERSIBLE VALVE: CYLINDERS	**36-00016-11**
INLET SECTION	**36-00014-11**
OUTLET SECTION	**36-00015-11**
FLOW CONTROL	**36-00013-11**
STROKE CONTROL VALVE	**36-00033-11**
SWINGER	**36-00070-11**
HC MANIFOLD 2 SPEED	**39-00063-11**
HC MANIFOLD SINGLE	**39-00065-11**

HYDRAULIC VALVE STUD KIT

Bolt to hold sections of hydraulic blocks together

SIZE	PART NUMBER
10 SECTION	**36-00004-11**
9 SECTION	**36-00005-11**
8 SECTION	**36-00006-11**
7 SECTION	**36-00007-11**
6 SECTION	**36-00008-11**
5 SECTION	**36-00009-11**
4 SECTION	**36-00010-11**
3 SECTION	**36-00011-11**
2 SECTION	**36-00078-11**

HYDRAULIC VALVES

DIRECTIONAL VALVE PARTS

ITEM	PART NUMBER
LEVER KIT	**39-00025-11**
VALVE CLEVIS WITH CAP	**39-00019-1**
VALVE CAP	**39-00016-11**
VALVE LEVER	**39-00018-11**
LEVER KNOB	**39-00026-11**
VALVE SECTION SPOOL ADAPTER	**39-00030-11**
VALVE CARTRIDGE	**36-00058-11**
SOLENOID COIL - MAGNET	**39-00001-11**
POWER OUTLET CARTRIDGE	**36-00057-11**
O-RING KIT	**36-00067-11**

DUAL RELIEF CUSHION VALVE

SIZE	PART NUMBER
1/2" NPT	**36-00030-11**
3/4" NPT	**36-00031-11**
SAE #8	**36-00056-11**
SAE #12	**36-00059-11**

LOW PRESSURE ACORN RELIEF CUSHION VALVE

PART NUMBER
36-00034-11

HYDRAULIC CYLINDERS

HYDRAULIC CYLINDER with CBV (LOCKDOWN VALVE)

CBV: Counter balance valve

SIZE	EQUIPMENT	PART NUMBER
4" x 18"	**LAGOON FEEDER**	**36-00075-11**
4" x 36"	**ROUND for BOOM & OUTRIGGER**	**36-00035-11**
4" x 24"	**BOOM**	**37-00005-11**
5" x 24"	**BOOM**	**36-00072-11**
5" x 36"	**BOOM**	**36-00060-11**

SQUARE HYDRAULIC CYLINDER

SIZE	EQUIPMENT	PART NUMBER
36"	**OUTRIGGERS & BOOMS**	**36-00023-11**

CLEVIS END for CYLINDER

PIN SIZE	THREAD SIZE	PART NUMBER
1 3/8"	**1 1/4"**	**36-00105-11**
1 3/4"	**1 1/2"**	**36-00071-11**

LOCKDOWN VALVE for HYDRAULIC CYLINDER

PART NUMBER
36-00003-11

HYDRAULIC CYLINDERS

HYDRAULIC CYLINDERS for KNIFE GATES

SIZE	PART NUMBER
2" x 4"	36-00032-11
2" x 6"	36-00028-11
2" x 6"	36-00027-11
2" x 10"	36-00029-11

HYDRAULIC CYLINDERS

SIZE	EQUIPMENT	PART NUMBER
4" x 16 7/8"	TURN TABLE REELS	36-00069-11
3 1/2" x 18"	HOSE CARTS	36-00026-11
4" x 18"	LAGOON FEEDERS	36-00043-11
5" x 18"	TOOLBARS	36-00021-11
24"	HOSE MOVER	36-00022-11
24"	AGITATION BOATS	36-00024-11
4" x 24"	BOAT TRAILER	36-00077-11
6" x 36"	HONEY BADGER BOOM	36-00066-11

HYDRAULIC SMART CYLINDERS for BOATS with AUTO-STEER

SIZE	EQUIPMENT	PART NUMBER
6"	BOATS with AUTO-STEER	36-00041-11
10"	BOATS with AUTO-STEER	36-00042-11

HYDRAULIC CYLINDERS with SWIVEL EYES for SWING PIPES

SIZE	SWIVEL EYES	PART NUMBER
4" x 24"	1 3/4"	36-00073-11
4" x 23 1/2"	1"	36-00036-11

HYDROSTAT PUMPS

HYDROSTAT SWITCH BLOCK & COMPONENTS

ITEM	PART NUMBER
HYDROSTAT SWITCH BLOCK	**34-00003-11**
W48-20-20U for HYDRAULIC SWITCH BLOCK	**36-00039-11**
W48-20-20U with #4 GAUGE PORT for SALAMI VALVE KIT	**36-00061-11**
SALAMI BLEED DOWN VALVE KIT	**37-00008-11**
HYDRAFORCE SOLENOID for HYDRAULIC SWITCH BLOCK	**36-00001-11**

HYDROSTAT - HYDRAULIC OIL COOLER

SIZE	PART NUMBER
20" x 24"	**39-00017-11**

BREATHER CAP ASSEMBLY KIT

ITEM	PART NUMBER
EDC CONTROLLER	**36-00054-11**
EDC CONTROLLER ORFICE KIT	**36-00055-11**

HYDROSTAT MOTORS

HYDROSTAT PTO ADAPTERS

ITEM	PART NUMBER
21 SPLINE FEMALE x 6 SPLINE MALE	**39-00021-11**
14 SPLINE FEMALE x 6 SPLINE MALE	**39-00032-11**
DODA 420 RESERVOIR	**67-02528-11**
DODA 420 2-PIECE PRESS FIT COUPLER	**67-00014A1-12**

HYDROSTAT THROTTLE CABLE

SIZE	PART NUMBER
10'	**38-00002-11**
7'	**38-00001-11**
HARDWARE	**38-00003-11**

DIETRICH SERIES 70

COMPLETE DIETRICH SERIES 70 ROW UNITS

Down tube not included

SIZE	PART NUMBER
4 x 6 WITH 8" HI RATE SWEEP	**74-00002-11**
6 x 6 WITH 8" HI RATE SWEEP	**74-00001-11**
4 x 6 WITH 12" HI RATE SWEEP	**74-00074-10**
6 x 6 WITH 12" HI RATE SWEEP	**74-00074-14**
18" FLAT NOTCHED CLOSER BLADE	**74-00055-11**

SERIES 70 COMPONENTS

8" LOW RATE SWEEP

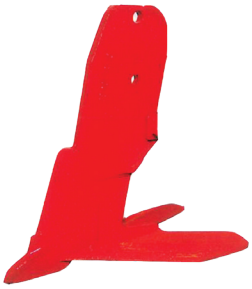

PART NUMBER

74-00056-11

- 8" wing width
- Designed for high speed (5-8 mph) and lower rates (2,500 - 5,000 gallons per acre) to meet the E.P.A. Phosphorus Rules.
- Lifts the soil less than 1"
- Vertical shank portion is 1/2" thick
- The 8" Low Rate Sweep moves less soil, allowing higher speeds at low rates.

8" HI RATE SWEEP

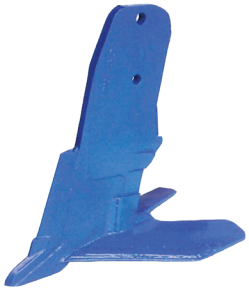

PART NUMBER

74-00015-11

- 8" wing width
- Designed for higher rates (5,000 - 10,000 gallons per acre)
- Lifts the soil less than 1 1/4"
- Vertical portion is 1" thick at the lower rear to create a wider slot to facilitate the filling of the soil cavity created by wings
- The 8" Hi Rate Sweep parts the soil more and creates a larger soil cavity than the 8" Low Rate Sweep to contain the liquid

12" HI RATE SWEEP

PART NUMBER

74-00016-11

- 12" wing width
- Designed for higher rates (10,000 - 15,000 plus gallons per acre; 20,000 gal. optional)
- Lifts the soil less than 1 1/4"
- Vertical portion is 1" thick at the lower rear to create a wider slot to facilitate the filling of the soil cavity created by the wings
- The 12" Hi Rate Sweep parts the soil more and creates a larger soil cavity than the 8" Hi Rate Sweep to contain the liquid

12" MAX HI RATE SWEEP

PART NUMBER

74-00067-11

- 12" wing width
- Designed for higher rates (20,000 plus gallons per acre)
- Rear extensions provide higher lift to create a larger cavity

SERIES 70 SHANK ASSEMBLY

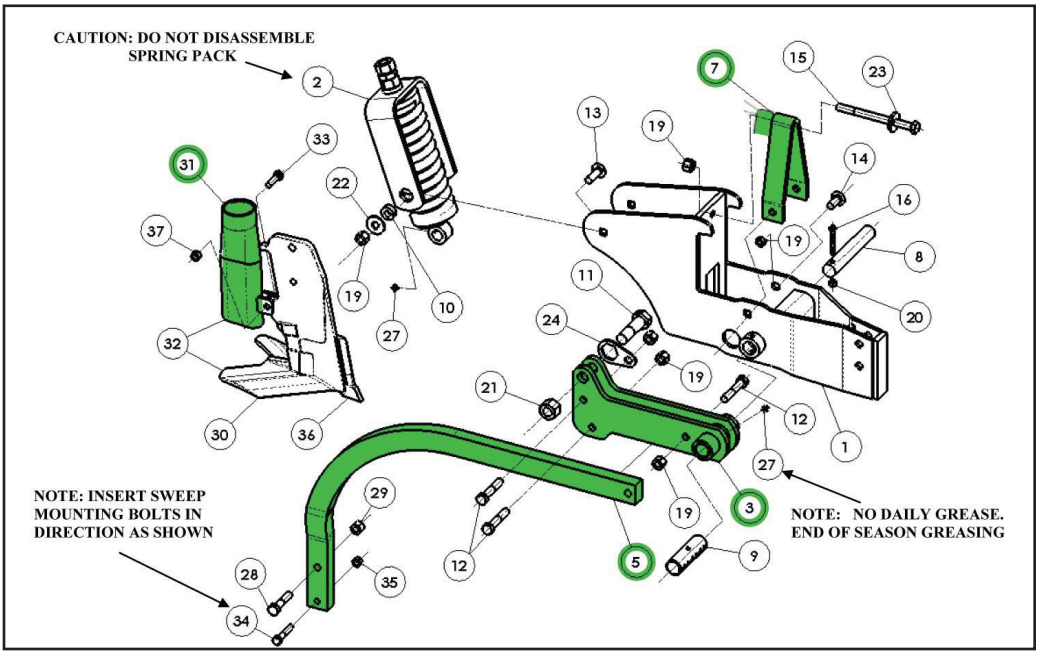

SERIES 70 SHANK ASSEMBLY

SCHEMATIC #	NAME	PART NUMBER
3	SHANK PIVOT WELDMENT	74-00005-11
5	FORMED SHANK	74-00006-11
7	SERIES 70 FLIP-UP BRACKET	74-00007-11
31	SPLASH PLATE	67-00339-11

SLURRY CLOZR

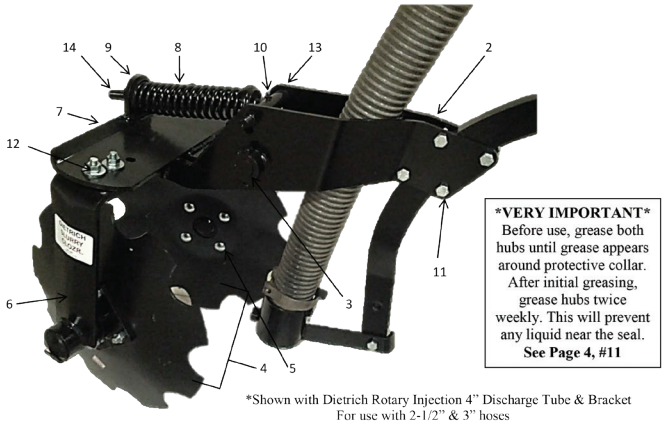

*Shown with Dietrich Rotary Injection 4" Discharge Tube & Bracket
For use with 2-1/2" & 3" hoses

SLURRY CLOZR 508100 ASSEMBLY

SCHEMATIC #	NAME	PART NUMBER
2	CLOZR MOUNT PLATE WELDMENT	74-00039-11
3	PIVOT PIN FOR CLOZR (1 1/4" x 7 1/4")	74-00040-11
4	18" CLOZR SPHERICAL NOTCHED BLADE	74-00041-11
6	COMPLETE CLOZR ARM ASSEMBLY	74-00037-11
7	PIVOT WELDMENT	74-00047-11
8	HEAVY SPRING	74-00048-11
9	CUP WASHER	74-00049-11
14	T-BOLT	74-00050-11

SLURRY CLOZR ARM ASSEMBLY

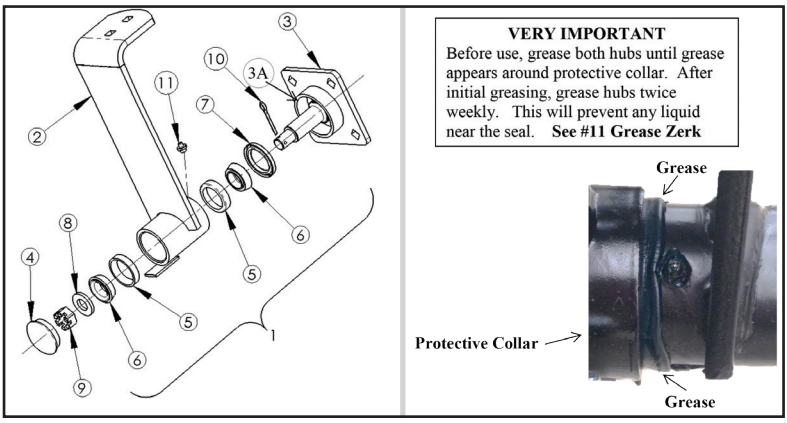

DOWN PRESSURE ASSEMBLY

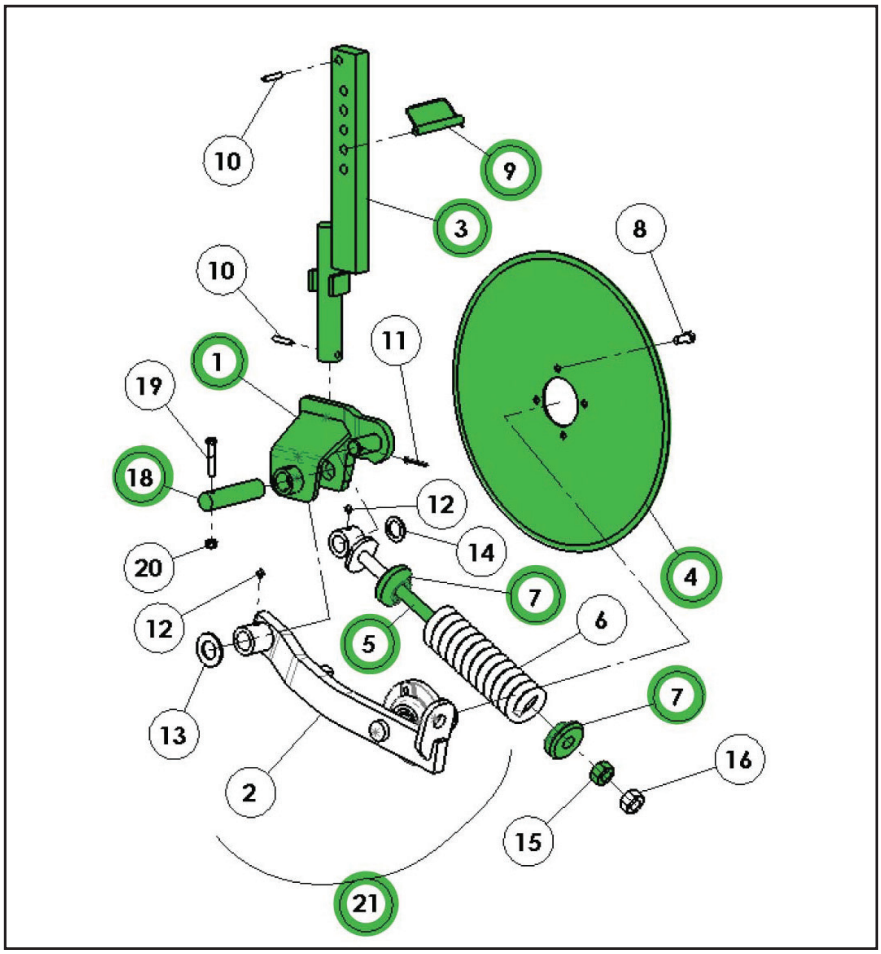

DOWN PRESSURE ASSEMBLY

SCHEMATIC #	NAME	PART NUMBER
1	COULTER PIVOT WELDMENT	74-00017-11
3	COULTER MOUNT 22"	74-00019-11
4	22" COULTER BLADE	74-00020-11
5	T BOLT WELDMENT	74-00021-11
7	SPRING CASTING	74-00023-11
9	SNAP PIN 5/8" x 4"	74-00025-11
18	PIVOT PIN 1 3/8" x 5 5/8"	74-00026-11
21	COULTER ARM ASSEMBLY (Less mount and blade)	74-00018-11

633 HUB ASSEMBLY

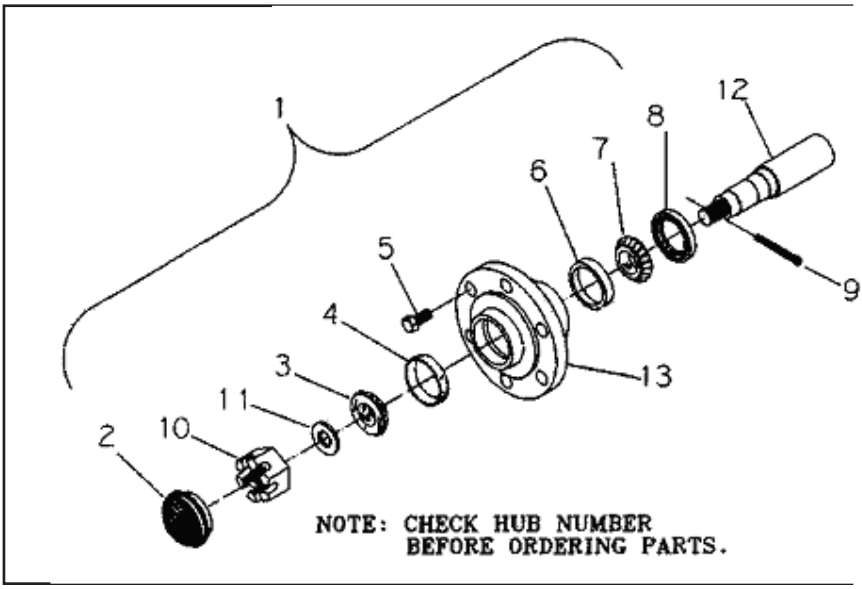

633 HUB ASSEMBLY

SCHEMATIC #	NAME	PART NUMBER
1	633 COMPLETE ASSEMBLY	74-00027-11
2	DUST CAP	74-00028-11
3	CONE BEARING (3/4" bore cone)	74-00029-11
4	CUP BEARING (1 39/50" OD cup)	74-00030-11
5	HUB BOLT 1/2" x 1 1/4" NF HEX BOLT	74-00024-11
6	CUP BEARING (2 1/3" OD)	74-00032-11
7	CONE BEARING (1 1/4" bore cone)	74-00031-11
11	3/4" SPECIAL WASHER	74-00033-11
12	SPINDLE	74-00034-11
13	633 HUB WITH CUPS	74-00035-11

T FLEX ROW UNITS

DOUBLE ROW OPENER
COMPLETE ASSEMBLY WITH CLOZR
Can be used with hydraflex or contour king swivel

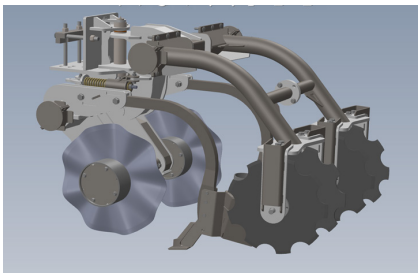

COMPLETE DOUBLE ROW ASSEMBLY

SIZE	PART NUMBER
24"	**75-00094-11**
30"	**75-00095-11**

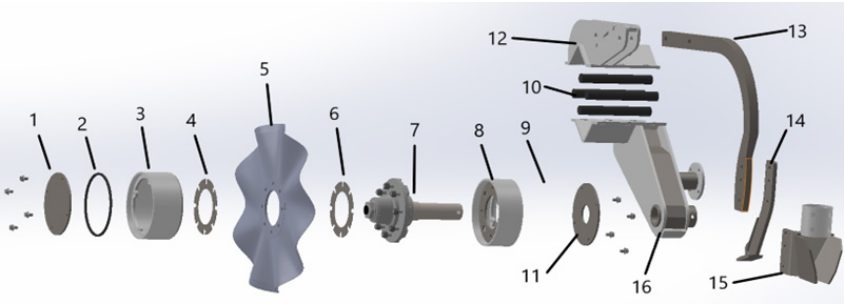

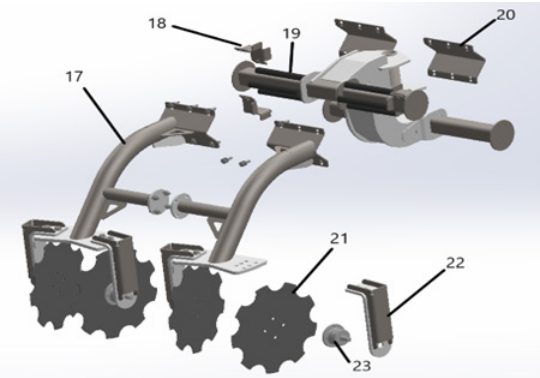

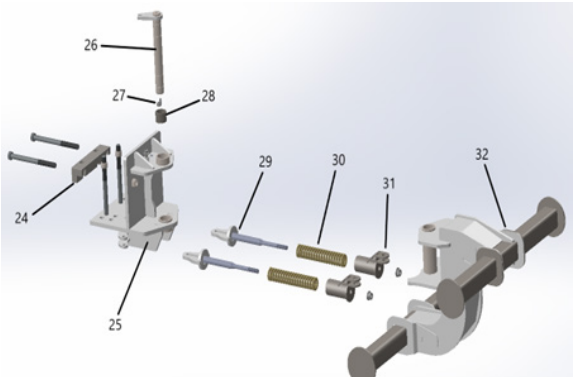

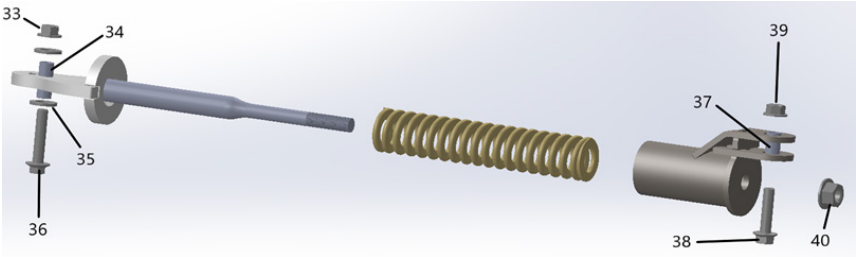

SCHEMATIC #	NAME	PART NUMBER
1	GROUND FOLLOWER ACCESS PLATE	21-02879-11
2	GROUND FOLLOWER ACCESS PLATE SEAL	75-00100-11
3	GROUND FOLLOWER WELDMENT	75-00038-11
4	COULTER SPACER	21-03285-11
5	24" 8 WAVE COULTER BLADE	75-00040-11
6	COULTER SPACER	21-03285-11
7	OPENER HUB ASSEMBLY	75-00044-11
8	REAR SEAL COVER WELDMENT	75-00093-11
9	GROUND FOLLOWER ACCESS PLATE SEAL	75-00100-11
10	OPENER TORSION RUBBER	75-00031-11
11	REAR SEAL COVER ACCESS PLATE	21-02376-11
12	SHANK MOUNT WELDMENT	75-00067-11
13	3 BOLT SHANK	75-00068-11
14	RIPPER SHOE WELDMENT	75-00054-11
15	SPLASH PLATE	75-00053-11
16	MAIN OPENER WELDMENT	75-00035-11
17	CLOSER ARM	75-00025-11
18	TORSION RUBBER KEEPER	28-01917-11
19	CLOSER ARM TORSION RUBBER	75-00021-11
20	CLOSER ARM RUBBER CLAMP PLATE	28-01487-11
21	18" NOTCHED CLOSER BLADE	75-00027-11
22	CLOSER BLADE MOUNT WELDMENT	75-00092-11
23	CLOSER HUB	75-00028-11
24	MACHINED MOUNTING BRACKET	29-00106-11
25	TOOL BAR MOUNT WELDMENT	75-00082-11
26	PIVOT PIN WELDMENT	75-00084-11
27	1/8" STREET ELBOW	46-00055-11
28	SPRING BUSHING	75-00011-11
29	MALE TENSIONER ROD WELDMENT	75-00013-11
30	SWIVEL SPRING	75-00012-11
31	TENSIONER SPRING WELDMENT	75-00070-11
32	MAIN PIVOTING WELDMENT	75-00081-11
33	M12-1 3/4 x 60MM BOLT	
34	BUSHING 1/2" ID x 5/8" OD x 1 1/2" L	46-00203-11
35	M16 WASHER	
36	M12-1 3/4 x 60MM BOLT	
37	BUSHING 1/2" ID x 5/8" OD x 1" L	46-00202-11
38	M12-1 3/4 x 50MM BOLT	
39	M12-1 3/4 TOP LOCK FLANGE NUT	
40	M16-2.0 TOP LOCK FLANGE NUT	

FLOW METER

10” LOW-NOISE 81-00020-11

REPLACEMENT FLOW TUBES
KROHNE OPTIFLUX 4000 FLOW SENSOR

8” TUBE - REMOTE MOUNT

ELECTRODE TYPE	PART NUMBER
LOW-NOISE	**81-00011-11**
STANDARD	**81-00025-11**

6” TUBE - REMOTE MOUNT

ELECTRODE TYPE	PART NUMBER
LOW-NOISE	**81-00010-11**
STANDARD	**81-00026-11**

JUNCTION BOX

Complete junction box for KROHNE OPTIFLUX 4000

PART NUMBER
81-00006-11

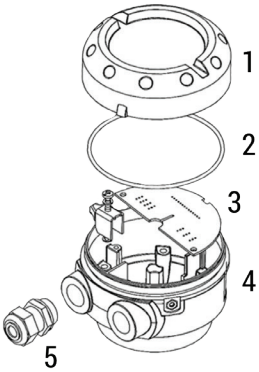

JUNCTION BOX COMPONENT PARTS

	NAME	PART NUMBER
1	**HOUSING COVER**	**81-00019-11**
2	**RUBBER GASKET O-RING**	**81-00004-11**
3	**TERMINAL PCB BOARD**	**81-00018-11**
4	**LOWER BASE HOUSING**	**81-00003-11**
5	**CABLE GLAND**	**81-00005-11**

KROHNE IFC 100 CONVERTER

AGRICULTURAL VERSION, FULLY POTTED

Compatible with all KROHNE OPTIFLUX 4000 Flow Sensors

	PART NUMBER
REMOTE MOUNT	**81-00012-11**
COMPACT MOUNT, 0 DEGREE	**81-00045-11**
COMPACT MOUNT, 45 DEGREE	**81-00046-11**

WEATHER PROTECTION COVER

Stainless steel splash shield with viewing door.

PART NUMBER
81-00007-11

	PART NUMBER
REPLACEMENT BLUE COVER WITH DISPLAY	**81-00013-11**

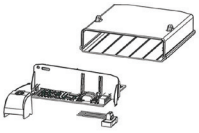

	PART NUMBER
REPLACEMENT ELECTRONICS	**81-00009-11**

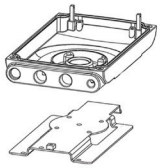

	PART NUMBER
REPLACEMENT WALL MOUNT BASE	**81-00014-11**

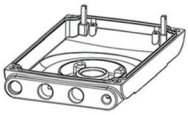

	PART NUMBER
REPLACEMENT 0 DEGREE BASE	**81-00021-11**

	PART NUMBER
REPLACEMENT 45 DEGREE BASE	**81-00007-11**

KROHNE

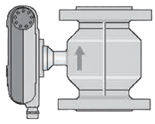

0º Compact

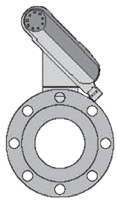

45º Compact

COMPACT MOUNT KROHNE 4100 FLOWMETER

AGRICULTURAL VERSION, FULLY POTTED

COMPLETE FLOW METERS 0 DEGREE COMPACT MOUNT

KROHNE OPTIFLUX 4000 Flow Sensor with ifc 100 converter

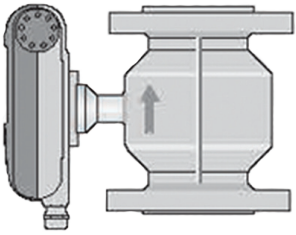

0º Compact

0 DEGREE LOW NOISE ELECTRODES

SIZE	PART NUMBER
8"	**81-00222-11**
6"	**81-00228-11**

0 DEGREE STANDARD ELECTRODES

SIZE	PART NUMBER
8"	**81-00223-11**
6"	**81-00229-11**
4"	**81-00233-11**
3"	**81-00236-11**

45 DEGREE MOUNT LOW NOISE ELECTRODES

SIZE	PART NUMBER
8"	**81-00224-11**
6"	**81-00230-11**

45 DEGREE MOUNT LOW NOISE ELECTRODES

SIZE	PART NUMBER
8"	**81-00225-11**
6"	**81-00231-11**
4"	**81-00234-11**
3"	**81-00237-11**

COMPLETE FLOW METERS 45 DEGREE COMPACT MOUNT

Krohne optiflux 4000 flow sensor with ifc 100 converter

REPLACEMENT FLOW TUBES
KROHNE OPTIFLUX 4000 FLOW SENSOR

For use with 0°or 45° flow tubes

8" TUBE - COMPACT MOUNT

NAME	PART NUMBER
LOW-NOISE	**81-00035-11**
STANDARD	**81-00036-11**

6" TUBE - COMPACT MOUNT

NAME	PART NUMBER
LOW-NOISE	**81-00037-11**
STANDARD	**81-00038-11**

COMPACT TUBE - STANDARD ELECTRODES

SIZE	PART NUMBER
4"	**81-00039-11**
3"	**81-00040-11**

6819MPC CORNELL PUMP

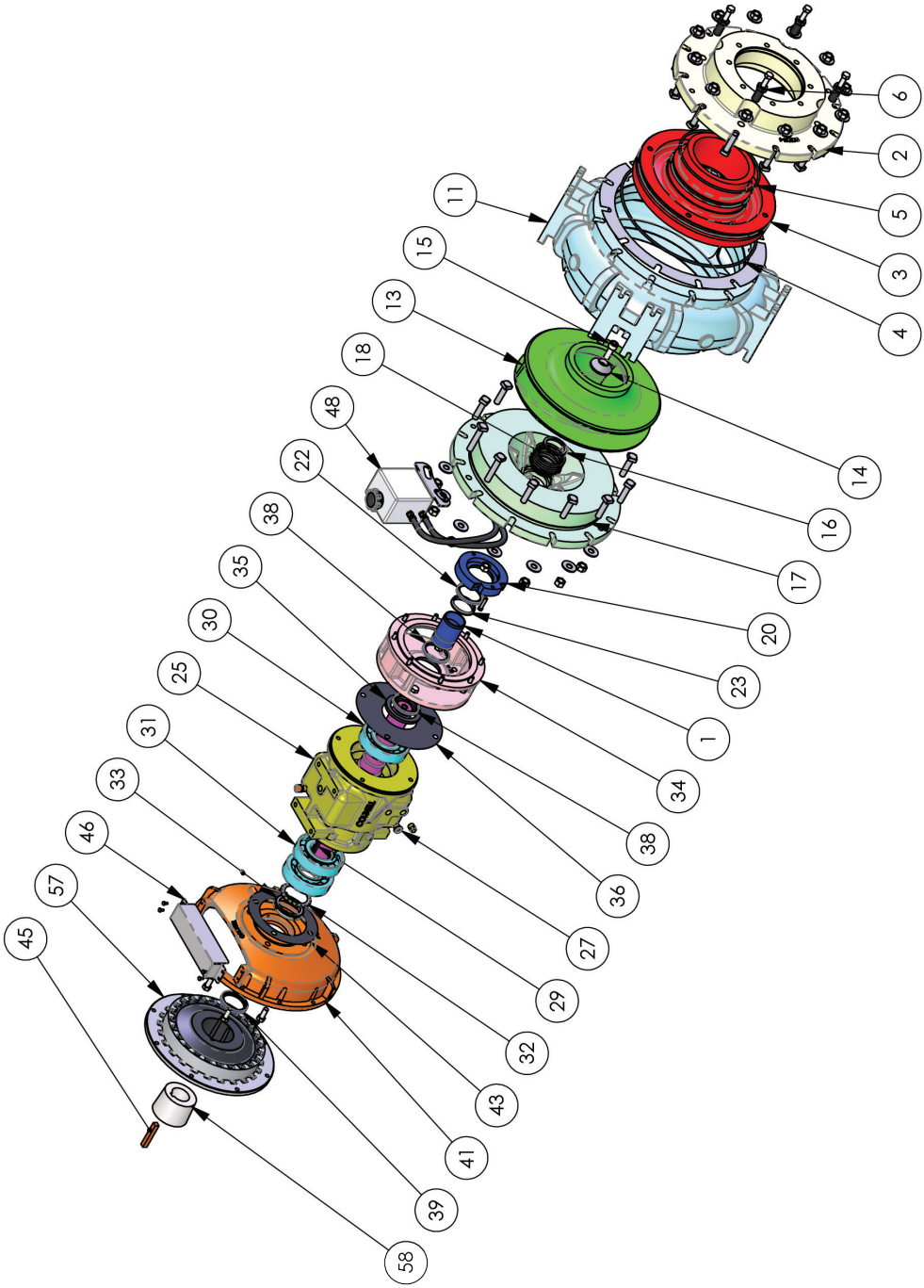

6819MPC CORNELL PUMP PARTS

SCHEMATIC #	NAME	PART NUMBER
1	SLEEVE	15-00142-11
2	SUCTION COVER - Ductile Iron	15-00040-11
3	WEAR PLATE	15-00291-11
4	O-RING - WEAR PLATE	15-00042-11
5	O-RING - SUCTION	15-00037-11
11	VOLUTE - Ductile Iron	15-00279-11
11	VOLUTE - White Iron	15-00280-11
13	IMPELLER - White Iron	15-00303-11
18	MECHANICAL SEAL	15-00066-11
18 - NEEDED WITH MECHANICAL SEAL	OIL SEAL	49-00029-11
23	V-RING	15-00337-11
29	SHAFT	15-00036-11

6819MP CORNELL PUMP

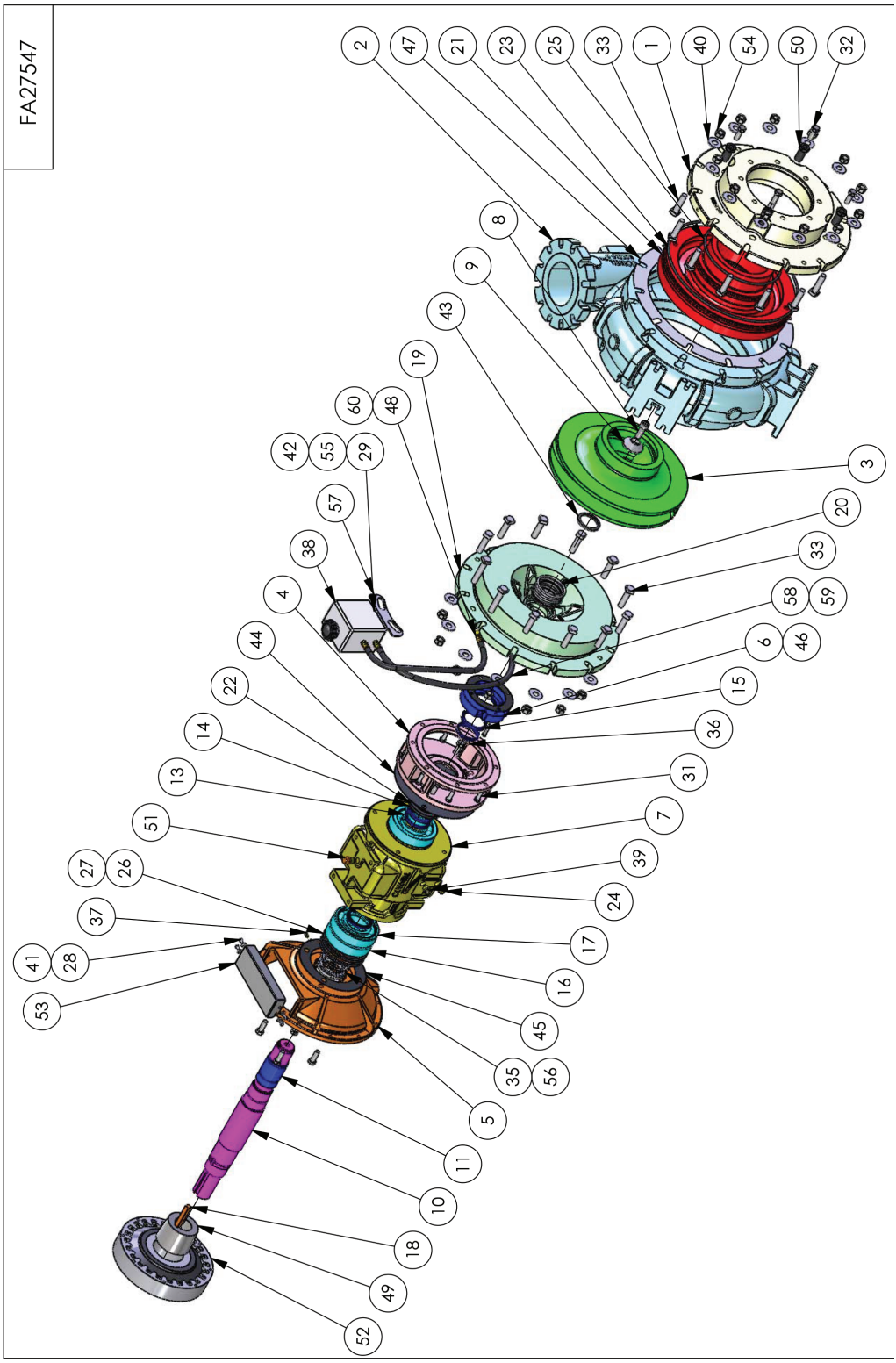

6819MP CORNELL PUMP PARTS

SCHEMATIC #	NAME	PART NUMBER
1	SUCTION COVER - Ductile Iron	15-00040-11
2	VOLUTE - Ductile Iron	15-00279-11
2	VOLUTE - White Iron	15-00280-11
3	IMPELLER - White Iron	15-00222-11
3	IMPELLER - Ductile Iron	15-00041-11
10	SHAFT	15-00036-11
11	SLEEVE	15-00142-11
12	V-RING	15-00337-11
20	MECHANICAL SEAL	15-00066-11
20 - NEEDED WITH MECHANICAL SEAL	OIL SEAL	49-00029-11
21	WEAR PLATE	15-00010-11
23	O-RING - WEAR PLATE	15-00042-11
25	O-RING - SUCTION	15-00037-11

6NHTC 19 CORNELL PUMP

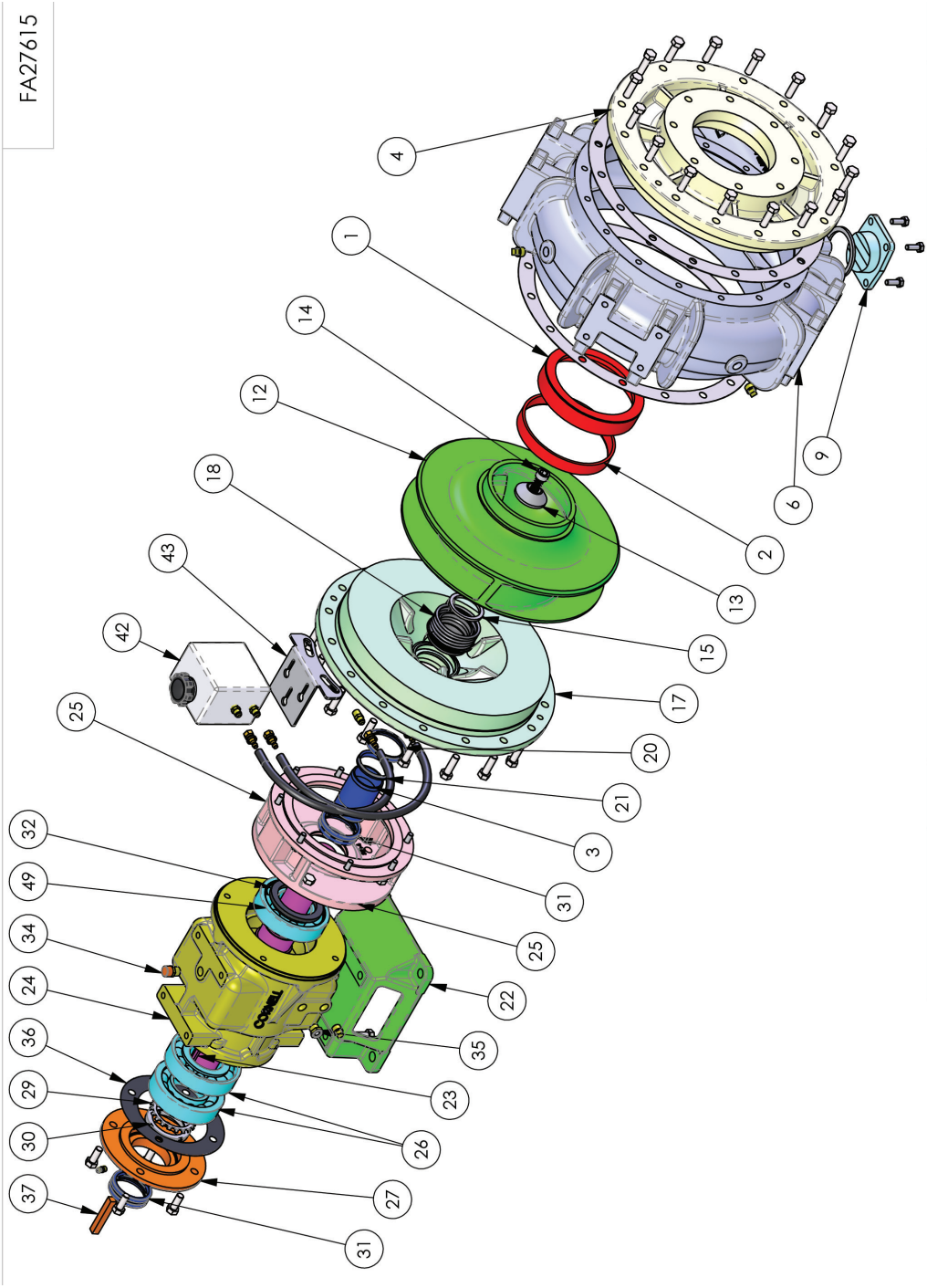

6NHTC 19 CORNELL PUMP PARTS

SCHEMATIC #	NAME	PART NUMBER
1	WEAR RING - SUCTION	15-00146-11
2	WEAR RING - IMPELLER	15-00235-11
3	SLEEVE	15-00142-11
4	SUCTION COVER - Ductile Iron	15-00319-11
6	VOLUTE	15-00348-11
12	IMPELLER - Ductile Iron	15-00349-11
18	MECHANICAL SEAL	15-00066-11
18 - NEEDED WITH MECHANICAL SEAL	OIL SEAL	49-00029-11
21	V-RING	15-00337-11
23	SHAFT	15-00054-11

6NHTB 19 CORNELL PUMP

FA27698

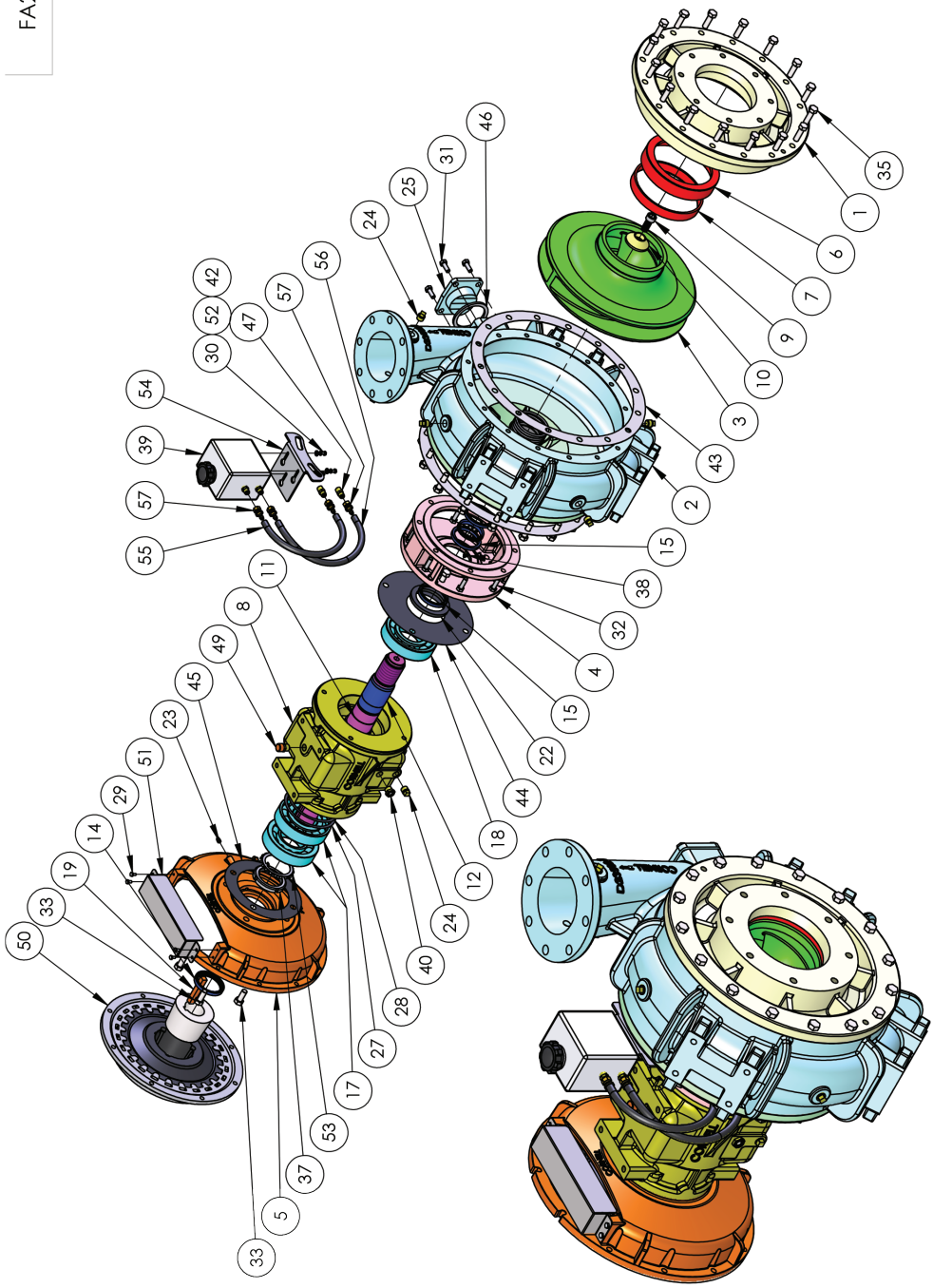

6NHTB 19 CORNELL PUMP PARTS

SCHEMATIC #	NAME	PART NUMBER
1	SUCTION COVER - Ductile Iron	15-00068-11
1	SUCTION COVER - Surfaced Hardened Cast or Ductile Iron	15-00074-11
2	VOLUTE - Surfaced Hardened Cast or Ductile Iron	15-00053-11
3	IMPELLER - Ductile Iron	15-00069-11
3	IMPELLER - Surface Hardened Cast or Ductile Iron	15-00075-11
6	WEAR RING - SUCTION	15-00146-11
7	WEAR RING - IMPELLER	15-00235-11
11	SHAFT	15-00054-11
12	SLEEVE	15-00142-11
13	V-RING	15-00337-11
21	MECHANICAL SEAL	15-00066-11
21 - NEEDED WITH MECHANICAL SEAL	OIL SEAL	49-00029-11

4NHTB CORNELL PUMP

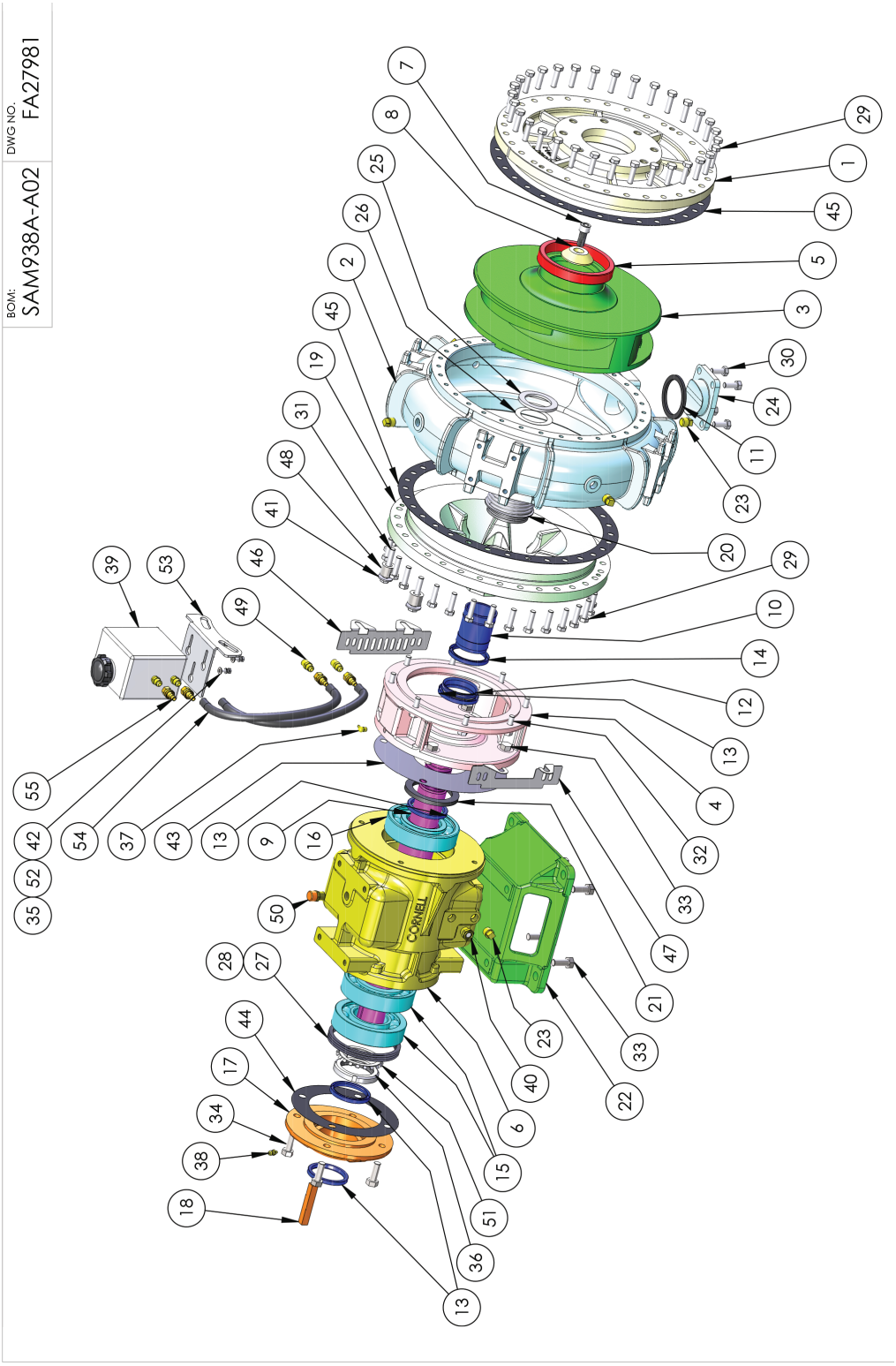

4NHTB CORNELL PUMP PARTS

SCHEMATIC #	NAME	PART NUMBER
1	SUCTION COVER - Ductile Iron	15-00081-11
2	VOLUTE - Ductile Iron	15-00208-11
3	IMPELLER - Ductile Iron	15-00207-11
5	WEAR RING	15-00206-11
9	SHAFT	15-00192-11
10	SLEEVE	15-00202-11
12	V-RING	15-00337-11
20	MECHANICAL SEAL	15-00066-11
20 - NEEDED WITH MECHANICAL SEAL	OIL SEAL	49-00029-11

10NNT CORNELL PUMP

FA27402

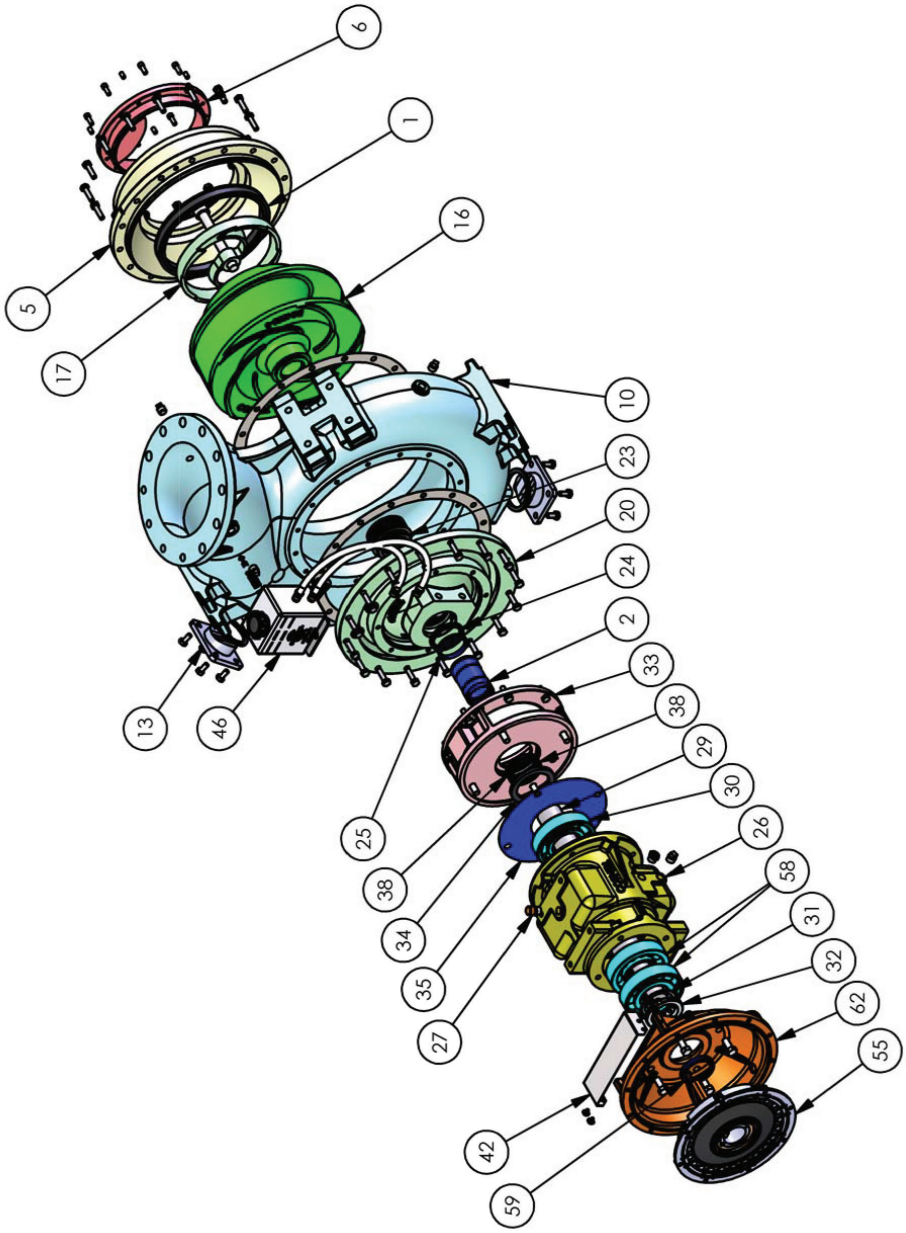

10NNT CORNELL PUMP PARTS

SCHEMATIC #	NAME	PART NUMBER
1	WEAR RING	15-00026-11
2	SLEEVE	15-00024-11
5	SUCTION COVER - Cast Iron	15-00031-11
6	IMPELLER CUTTER - Heat Treated Stainless Steel	15-00029-11
10	VOLUTE - Cast Iron	15-00022-11
16	IMPELLER - White Iron	15-00033-11
17	CUTTER PLATE	15-00313-11
23	MECHANICAL SEAL	15-00066-11
23 - NEEDED WITH MECHANICAL SEAL	OIL SEAL	49-00029-11
25	V-RING	15-00337-11
29	SHAFT	15-00023-11

61017MP CUTTER CORNELL PUMP

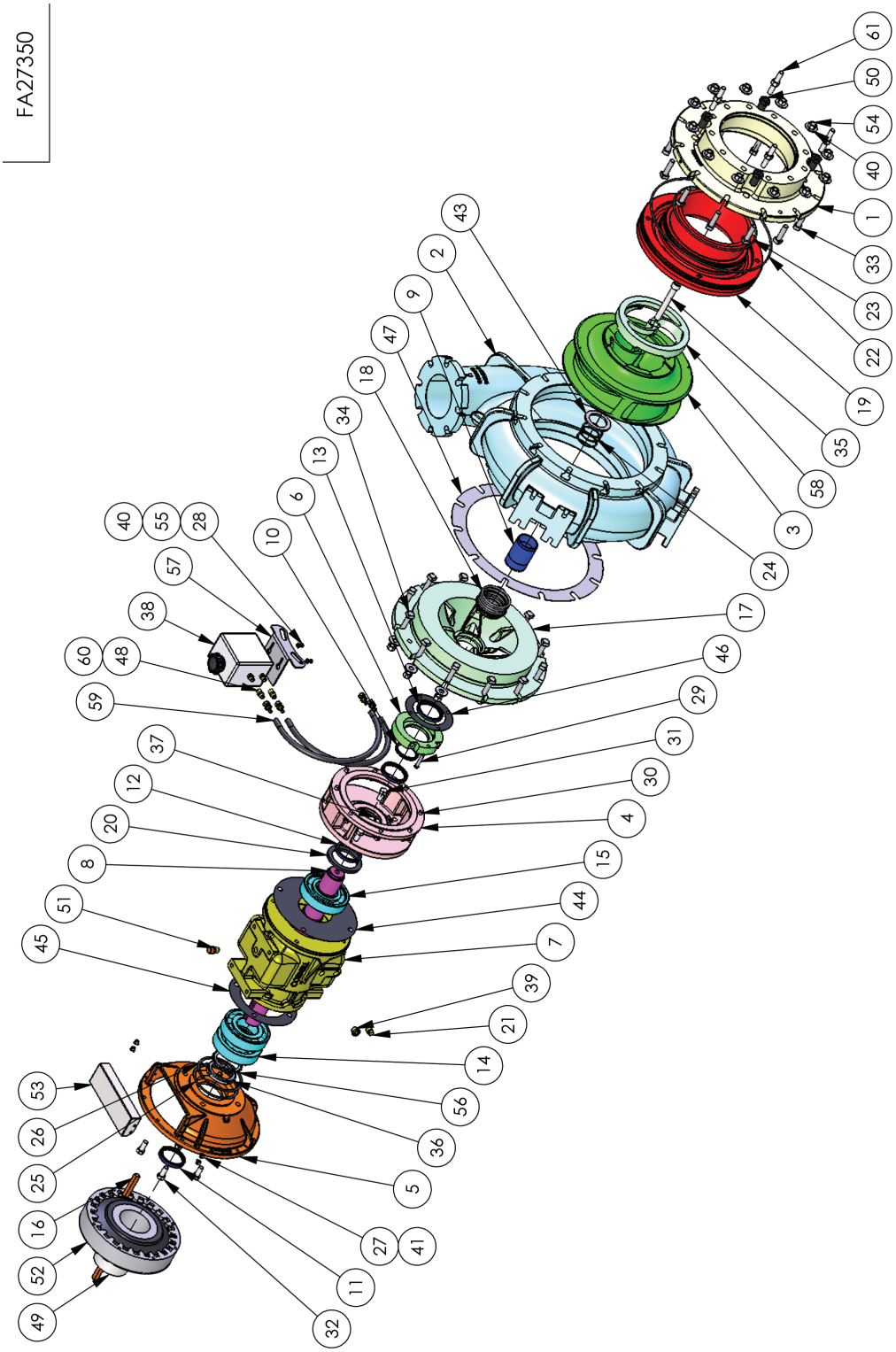

61017MP CORNELL PUMP PARTS

SCHEMATIC #	NAME	PART NUMBER
1	SUCTION COVER - Ductile Iron	15-00350-11
2	VOLUTE - Ductile Iron	15-00351-11
3	IMPELLER - White Iron	15-00269-11
8	SHAFT	15-00054-11
9	SLEEVE	15-00142-11
10	V-RING	15-00337-11
18	MECHANICAL SEAL	15-00066-11
18 - NEEDED WITH MECHANICAL SEAL	OIL SEAL	49-00029-11
19	WEAR PLATE	15-00215-11
22	O-RING - WEAR PLATE	15-00199-11
23	O-RING - SUCTION	15-00200-11

6NHTB 17 CUTTER GENERATION 3 PUMP

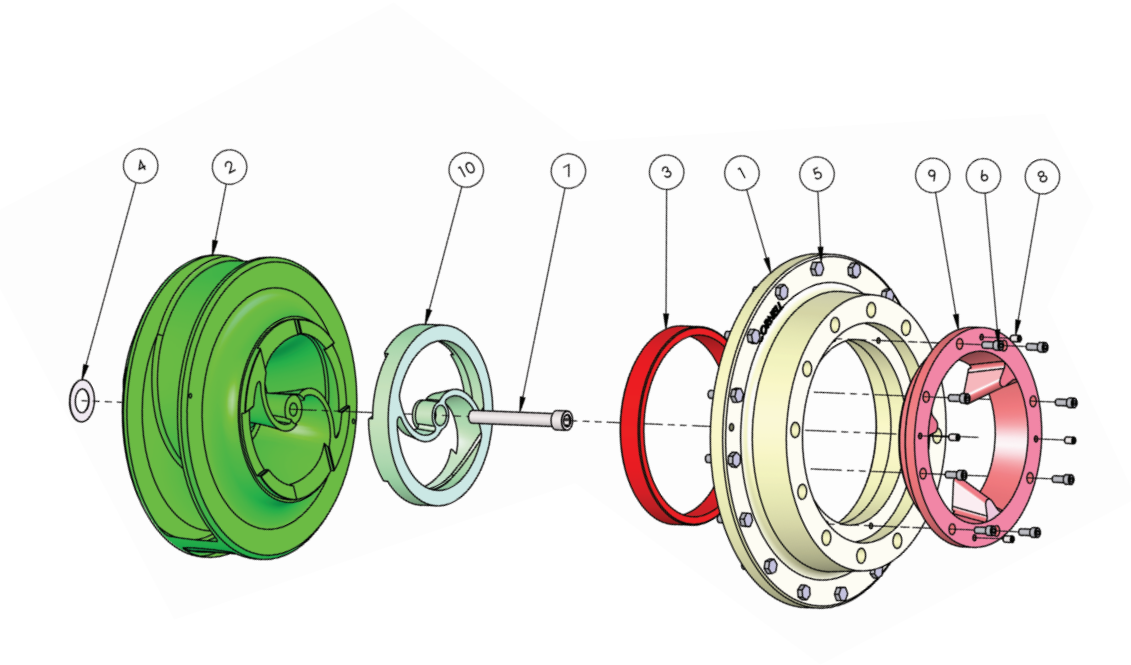

SUCTION COVER

METAL	PART NUMBER
WHITE IRON	**15-00006-11**
CAST IRON	**15-00017-11**
SURFACE HARDENED CAST OR DUCTILE	**15-00061-11**

IMPELLER - OPTION 1

METAL	PART NUMBER
WHITE IRON (TYPE A)	**15-00007-11**
WHITE IRON (61017)	**15-00269-11**
WEAR RING - HEAT TREATED STAINLESS STEEL	**15-00070-11**

IMPELLER - OPTION 2

METAL	PART NUMBER
SURFACE HARDENED CAST OR DUCTILE (TYPE B)	**15-00073-11**
WHITE IRON (TYPE C)	**15-00062-11**
WEAR RING - HEAT TREATED STAINLESS STEEL	**15-00057-11**

CUTTER PLATE

METAL	PART NUMBER
SINGLE TOOTH - HEAT TREATED STAINLESS STEEL	**15-00016-11**
3 TOOTH - HEAT TREATED STAINLESS STEEL	**15-00080-11**

SHARED COMPONENTS

ITEM	PART NUMBER
V-RING	**15-00340-11**
MECHANICAL SEAL	**15-00066-11**
OIL SEAL - NEEDED WITH MECHANICAL SEAL	**49-00029-11**
SHAFT	**15-00054-11**
SLEEVE	**15-00055-11**

VOLUTE

METAL	PART NUMBER
CAST IRON	**15-00053-11**

6NHTB 17 CUTTER GENERATION 2 PUMP

TYPE A

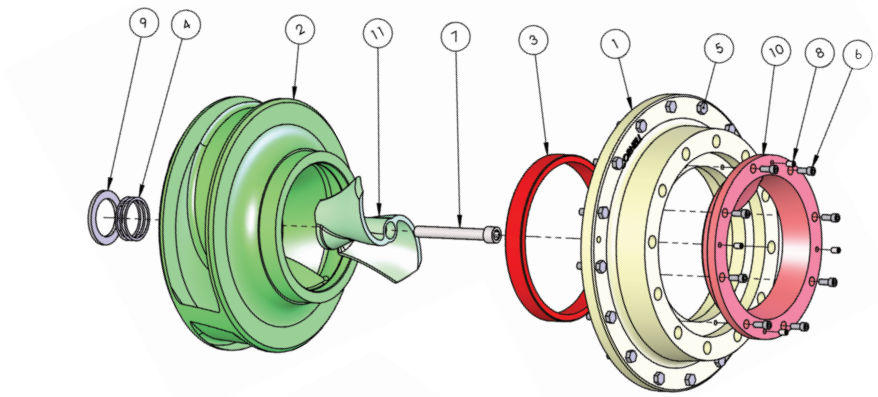

TYPE B

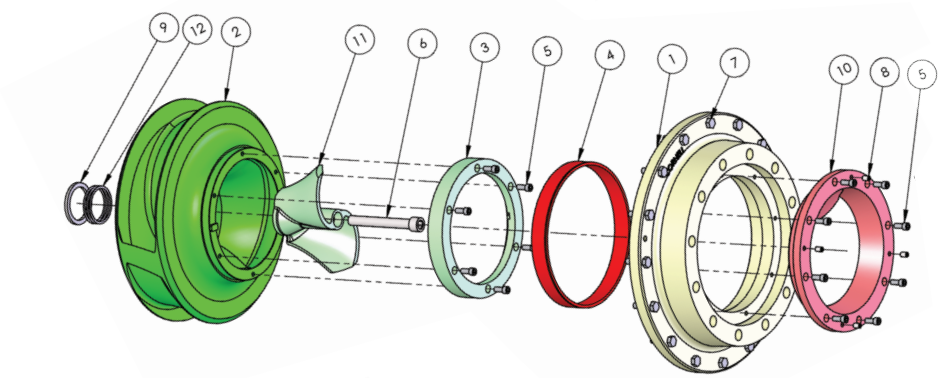

TYPE C

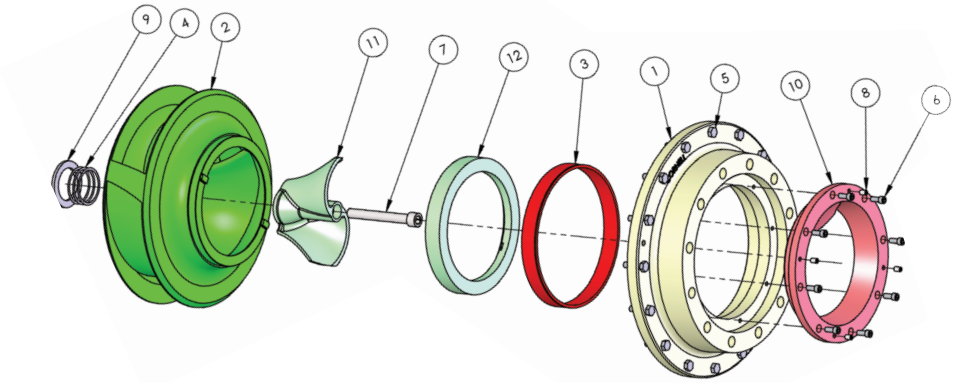

SUCTION COVER

METAL	PART NUMBER
WHITE IRON	**15-00006-11**
CAST IRON	**15-00017-11**
SURFACE HARDENED CAST OR DUCTILE	**15-00061-11**

IMPELLER - OPTION 1

METAL	PART NUMBER
WHITE IRON (TYPE A)	**15-00007-11**
WEAR RING - HEAT TREATED STAINLESS STEEL	**15-00070-11**

IMPELLER - OPTION 2

METAL	PART NUMBER
SURFACE HARDENED CAST OR DUCTILE (TYPE B)	**15-00073-11**
WHITE IRON (TYPE C)	**15-00062-11**
WEAR RING - HEAT TREATED STAINLESS STEEL	**15-00057-11**

CUTTER PLATE

METAL	PART NUMBER
SINGLE TOOTH - HEAT TREATED STAINLESS STEEL	**15-00016-11**
3 TOOTH - HEAT TREATED STAINLESS STEEL	**15-00080-11**

SHARED COMPONENTS

ITEM	PART NUMBER
V-RING	**15-00340-11**
MECHANICAL SEAL	**15-00066-11**
OIL SEAL - NEEDED WITH MECHANICAL SEAL	**49-00029-11**
SHAFT	**15-00054-11**
SLEEVE	**15-00055-11**

VOLUTE

METAL	PART NUMBER
CAST IRON	**15-00053-11**

6NHTB 17 CUTTER GENERATION 1 PUMP

TYPE A

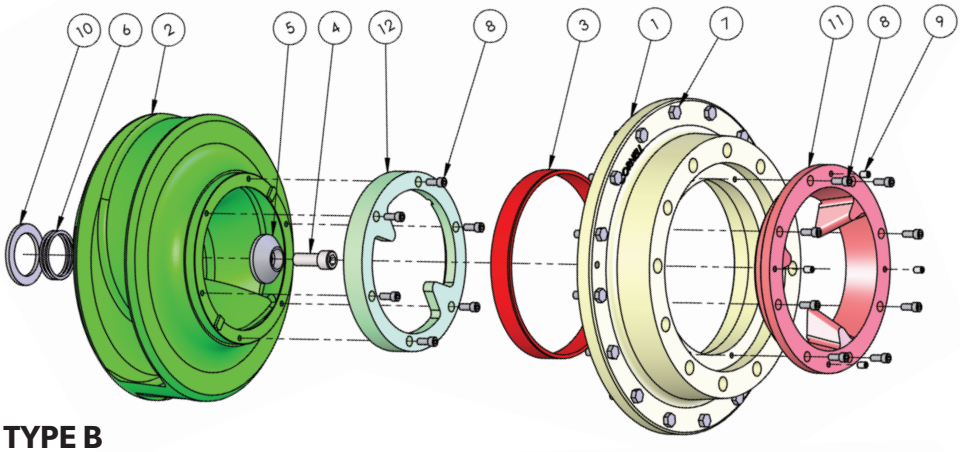

TYPE B

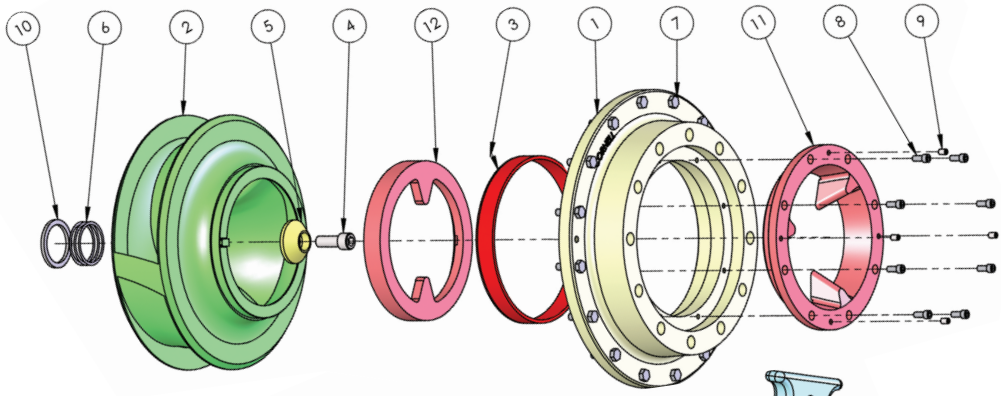

TYPE C

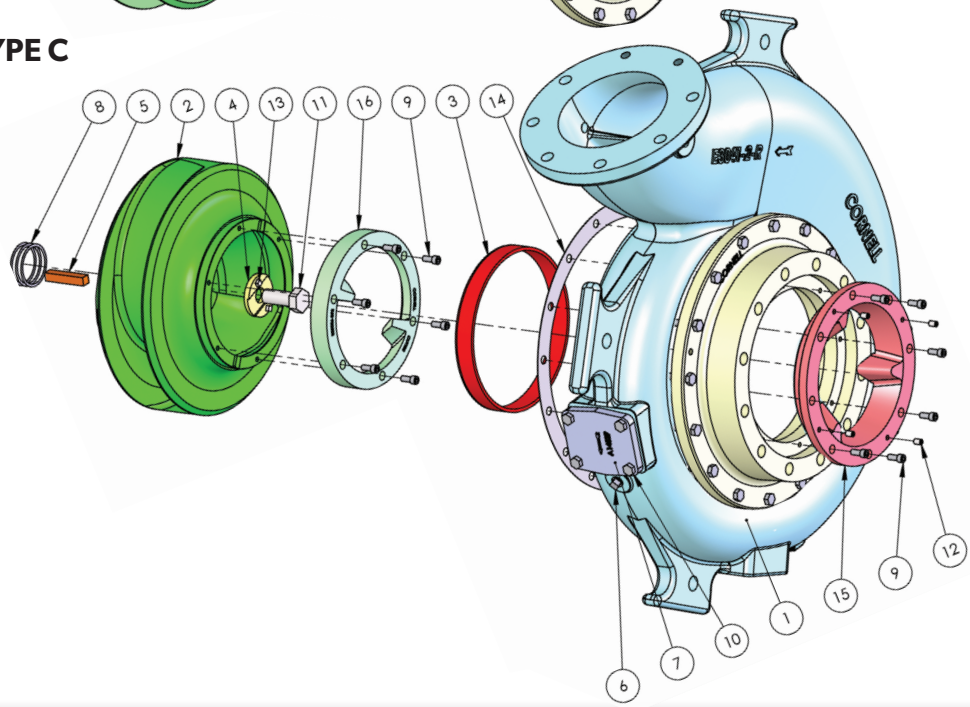

SUCTION COVER

METAL	PART NUMBER
WHITE IRON	**15-00006-11**
CAST IRON	**15-00017-11**
SURFACE HARDENED CAST OR DUCTILE	**15-00061-11**

IMPELLER

METAL	PART NUMBER
CAST IRON	**15-00018-11**
SURFACE HARDENED CAST OR DUCTILE	**15-00073-11**
WHITE IRON	**15-00062-11**
WEAR RING - 6NHTB CUTTER	**15-00057-11**

CUTTER PLATE

METAL	PART NUMBER
3 TOOTH - HEAT TREATED STAINLESS STEEL	**15-00080-11**
2 TOOTH	**15-00060-11**

SHARED COMPONENTS

ITEM	PART NUMBER
V-RING	**15-00340-11**
MECHANICAL SEAL	**15-00066-11**
OIL SEAL - NEEDED WITH MECHANICAL SEAL	**49-00029-11**
SHAFT	**15-00054-11**
SLEEVE	**15-00055-11**

VOLUTE

METAL	PART NUMBER
CAST IRON	**15-00053-11**

8NNWH CORNELL PUMP

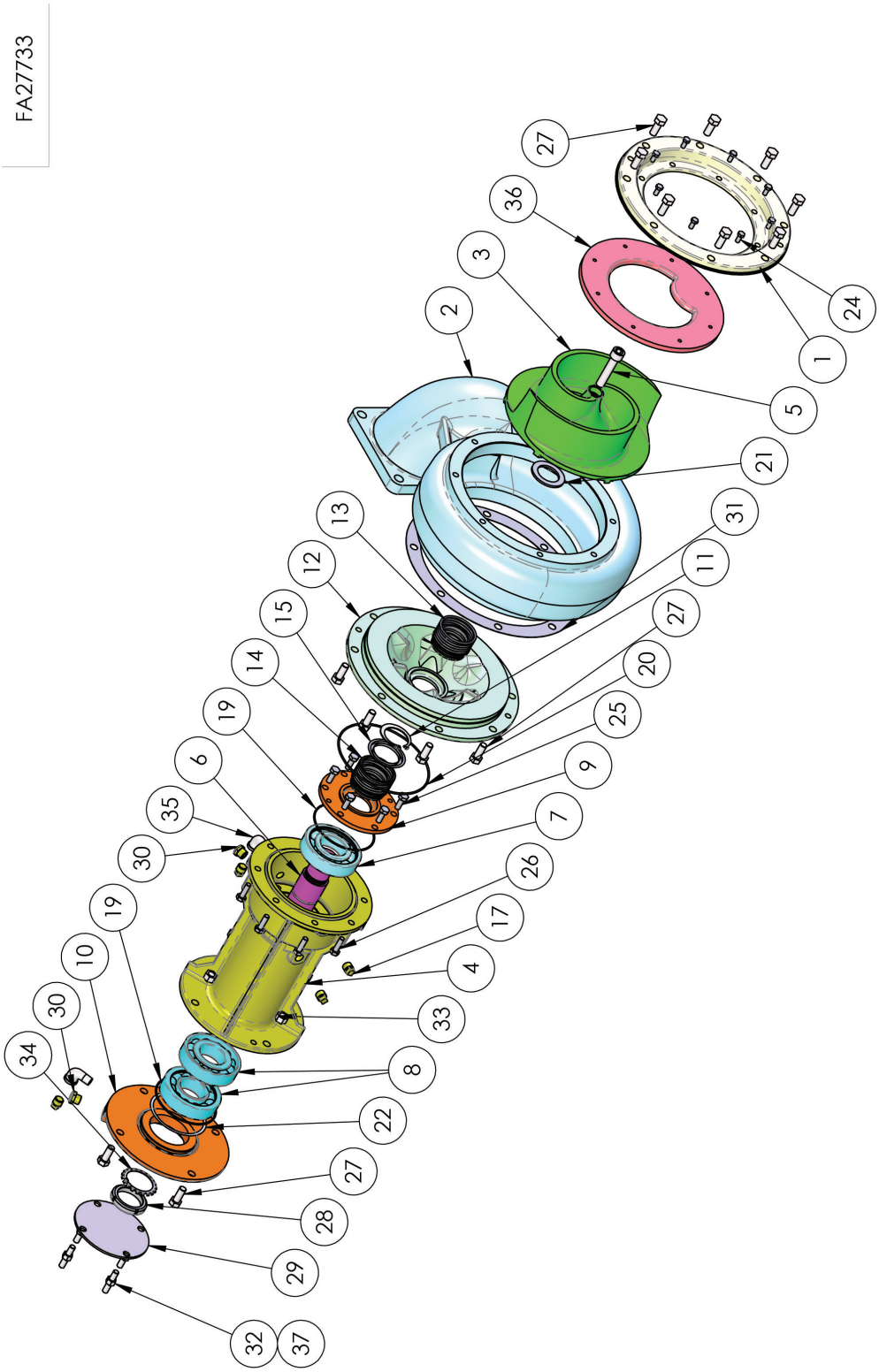

8NNWH CORNELL PUMP PARTS

SCHEMATIC #	NAME	PART NUMBER
13	**MECHANICAL SEAL**	**15-00166-11**
13 - NEEDED WITH MECHANICAL SEAL	**OIL SEAL**	**15-00168-11**
18	**O-RING**	**15-00320-11**

SUPER 200 DODA PUMP

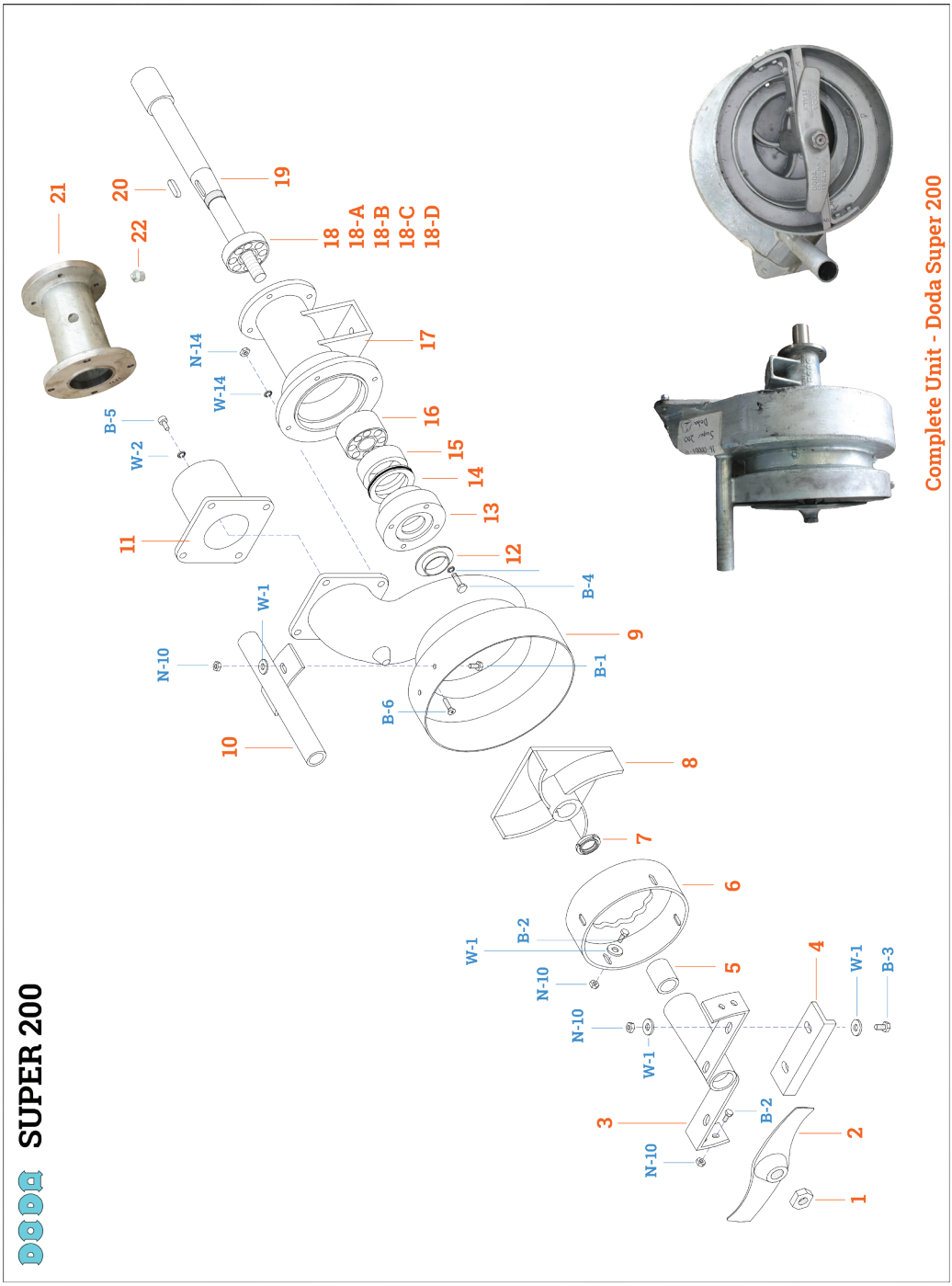

SUPER 200 DODA PUMP PARTS

SCHEMATIC #	NAME	PART NUMBER
2	ROTATING CHOPPER BLADE	16-00003-11
3	STATIONARY CUTTER BLADE	16-00004-11
4 & 5	SUPPORT STATIONARY BLADE	16-00005-11
5	REPLACEMENT BUSHING	16-00006-11
6	PRESSURE PLATE	16-00006-11
8	4 VANE IMPELLER	16-00051-11
9	PUMP HOUSING	16-00052-11
10	STAND OFF PEG SPACER	16-00042-11
11	TUBE, FLANGED BOTTOM	16-00053-11
13	SEAL HOLDER	16-00029-11
14	SEAL	16-00011-11
15	MECHANICAL SEAL	16-00013-11
16	BEARING	16-00015-11
17	SHAFT ADAPTER BUSHING 4-BOLT	16-00025-11
18	REPAIR KIT FOR BEARING	16-00200-11
18A	BEARING	16-00016-11
19 & 20	IMPELLER SHAFT	16-00017-11
21 & 22	EXTERNAL HOUSING, SUPPORT FOR HYDRAULIC MOTOR with OIL PLUG	16-00010-11

CORPO S 420 VERTICAL DODA PUMP

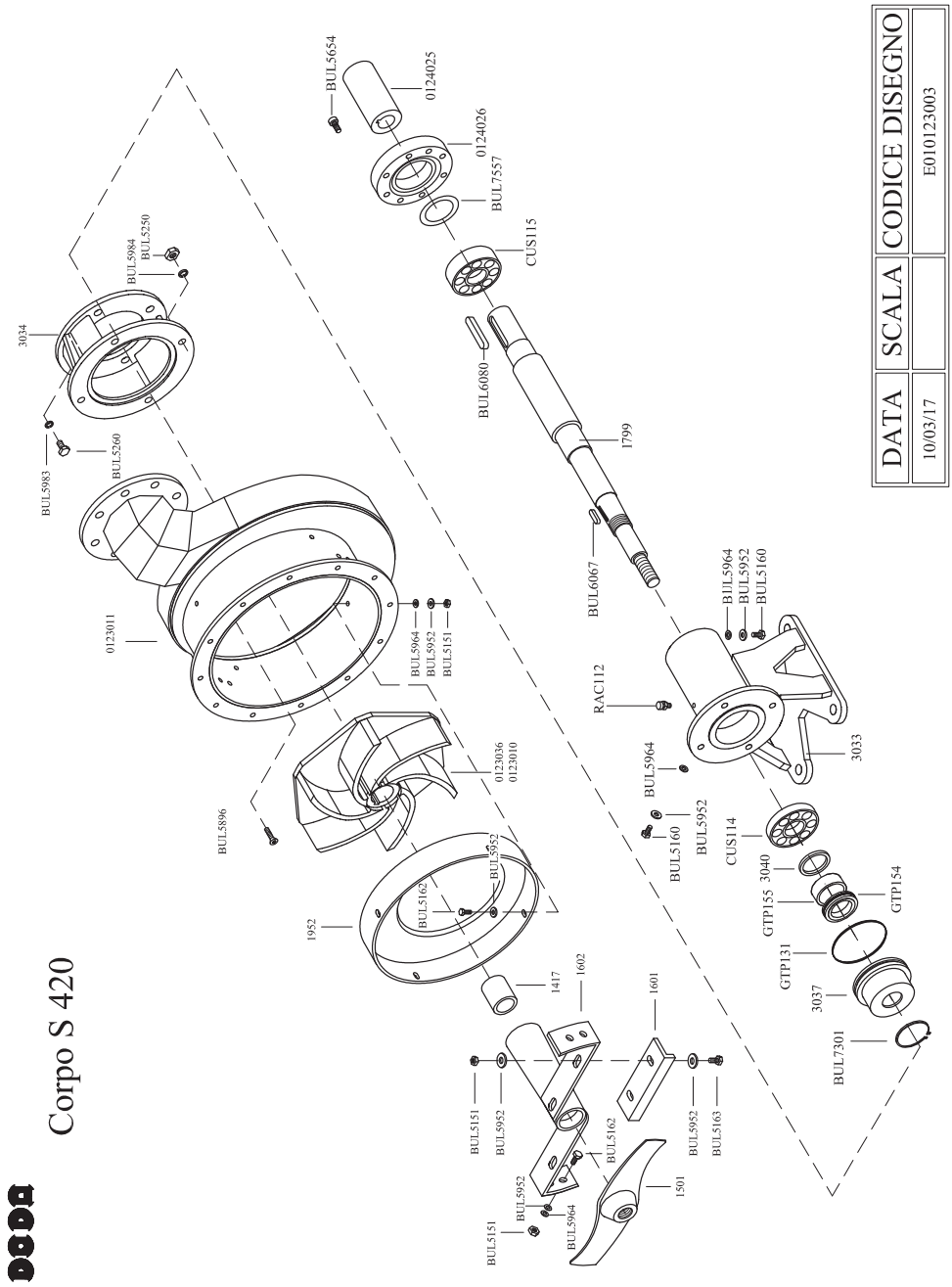

SUPER 420 DODA PUMP PARTS

SCHEMATIC #	NAME	PART NUMBER
1	DODA #1501 CHOPPER BLADE	16-00003-11
2	DODA #1601 CUTTER BLADE STATIONARY	16-00004-11
3	DODA #1602 SUPPORT	16-00005-11
4	BRONZE BUSHING DODA 420 (1417)	16-00072-11
5	GLV PRESSURE PLATE FOR AFI DODA 420 (1952)	16-00071-11
6	IMPELLER DODA 420 (0123010)	16-00070-11
7	PUMP HOUSING DODA 420 (123011)	16-00069-11
8	AFI GEAR BOX SUPPORT DODA 420 (30340)	16-00068-11
9	SNAP RING AFI PD DODA 420 (GTP131)	16-00067-11
10	AFI WIDIA ROTATING FOR PROP DODA 420 (GTP154)	16-00066-11
11	O-RING AFI PD DODA 420 (GTP131)	16-00065-11
12	SEAL WIDIA ROTATING FOR PROP DODA 420 (GTP155)	16-00063-11
	SEAL WIDIA ROTATING FOR PROP DODA 420 (GTP154)	16-00064-11
	AFI PD VERTICAL BUSH 55/45 L=5 DODA 420 (3040)	16-00062-11
13	BEARING 31309 J2/QCL7C DODA 420 (CUS114)	16-00061-11
14	PEDESTAL AFI PD DODA 420 (3033)	16-00060-11
15	DODA #BUL6067 KEY, 8 X 7 X 45MM AFI & VERT	16-00050-11
16	SHAFT FOR DODA 420 - DODA 1799	16-00075-11
17	BEARING 6209 DODA 420 (CUS115)	16-00058-11
18	SHIM 65X85 DODA 420 (BUL7557)	16-00073-11

PROUDLY

AMERICAN MADE

In the land of the free Puck is built to lead. Our products are proudly hand-crafted in the heart of this great country—in the very town our company was founded over 45 years ago. We utilize only the best materials from the ground up to keep your operation running strong year after year.

LOCATIONS

LOCATIONS

MANNING
1110 100th St
Manning, IA
712.655.9200

DUBUQUE
10166 Hartbecke Rd
Suite B · Farley, IA
712.655.9203

WORTHING
47086 Pioneer St
Worthing, SD
712.655.9202

AURORA
3626 State Route 90
Aurora, NY
712.655.9206

ANGIER
BullDog Hose Company
141 Junny Rd
Angier, NC
712.655.9201

DOTHAN
U.S. Coupling
1134 North Range St
Dothan, AL
888.447.6441

INTERNATIONAL
Vukovarska 229 C
31000 Osijek · Croatia
+ 385 31 659 229

NOTES & LISTS

MODELS I OWN & PUMP SERIAL NUMBERS:

ITEMS TO ORDER:

QUESTIONS FOR PUCK: 712-655-9200

PUCK PUMP SCHOOL

Puck is committed to offering customers the knowledge and equipment to maximize their profit potential. Our goal is to share what we have learned over the past 45 years as applicators, gain insight into your operation and find new executions for improved efficiency. Pump School provides the opportunity to discuss how to better use the tools that we already possess and create more efficient tools for the future.

*Visit us at **Puck.com/pump-school** to learn more!*

What Does More Flow Mean?

Flow GPM	Gallons per Hour	Hours per 1,000,000	Gallons 80 Hours	1.5 ¢ per Gallon
1,000	60,000	16.67	4,800,000	$72,000
1,500	90,000	11.11	7,200,000	$108,000
2,000	120,000	8.33	9,600,000	$144,000
2,500	150,000	6.67	12,000,000	$180,000
3,000	180,000	5.56	14,400,000	$216,000
3,500	210,000	4.76	16,800,000	$252,000
4,000	240,000	4.17	19,200,000	$288,000
4,500	270,000	3.70	21,600,000	$324,000
5,000	300,000	3.33	24,000,000	$360,000

More Gallons Equals More Opportunity of Income!

Prepare for your application season!

Stock parts and supplies for your team to be successful.

PUCK™
Built to Lead.