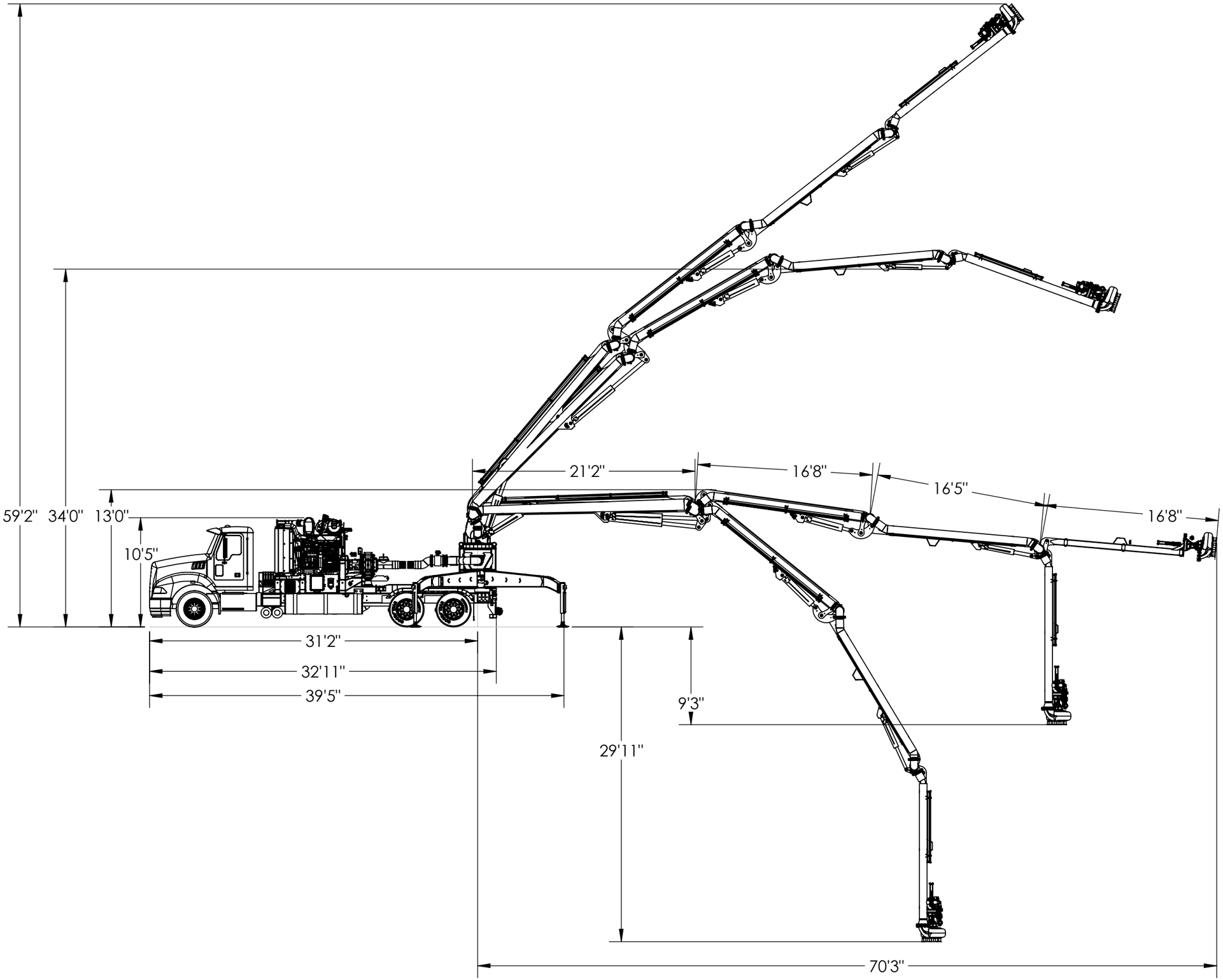
59'2"
34'0"
13'0"
10'5"
21'2"
16'8"
16'5"
16'8"
31'2"
32'11"
39'5"
9'3"
29'11"
70'3"

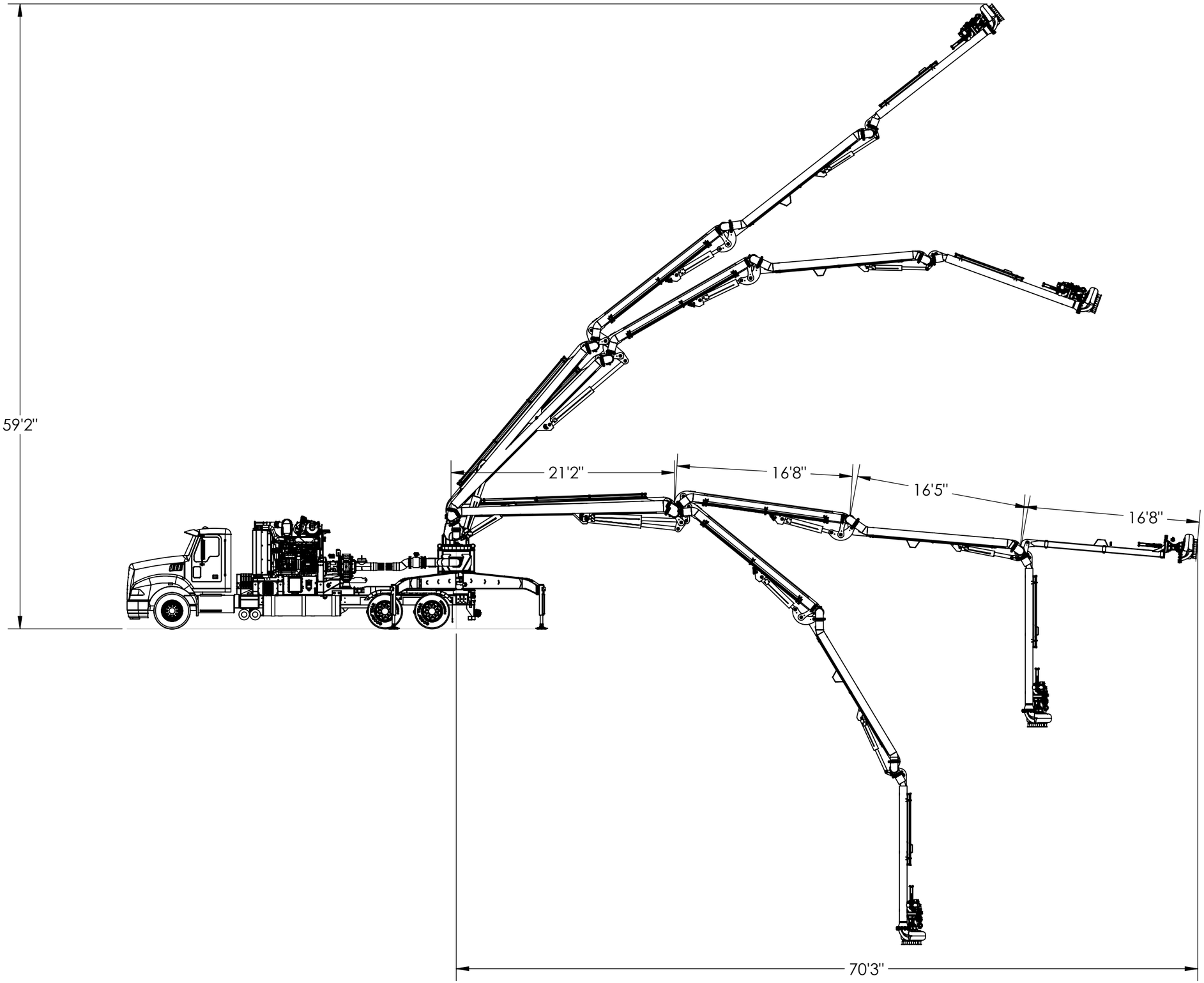
59'2"
21'2"
16'8"
16'5"
16'8"
70'3"